Spare parts catalogue

Fermator

AUTOMATIC DOORS FOR LIFTS

Multimedia Design and production by Fermator.
2008 edition.

Tecnolama, S.A.
Ctra. Constantí, km3
43206 Reus (Tarragona)
España

Fermator reserves the right to modify the specifications and prices of the products in this catalogue without prior warning.

Rate revision 2008.
The rates are valid except typographical mistake.
The price of packaging is not included.
IVA or VAT not included.

Index

1. Cabin Doors

1.1 VVVF model

- Motor ..... Page 11
- Encoder ..... Page 11
- Motor pulley ..... Page 12
- Motor support ..... Page 12
- Skate assembly ..... Page 12
- Contact and lock skate assembly ..... Page 13
- Q model skate assembly for special height cabins ..... Page 14
- Connecting rod rubber stop ..... Page 15
- Release cam assembly ..... Page 15
- Cabin locking device assembly ..... Page 16
- Pulling trigger ..... Page 16
- Pulling trigger spring ..... Page 17
- Connecting rod spring ..... Page 17
- Idle pulley tensioner assembly ..... Page 17
- Idle pulley ..... Page 18
- Stopping retainer asembly ..... Page 18
- Stopping retainer support sub asembly ..... Page 19
- Stopping retainer trigger ..... Page 19
- Stopping retainer spring ..... Page 20
- Toothed belt ..... Page 20
- Electrical contact assembly ..... Page 21
- End stroke stop ..... Page 21
- Toothed belt base assembly ..... Page 21
- Cable fastener assembly ..... Page 22
- Syncronisation cable ..... Page 22
- Programming console ..... Page 22
- VVVF electronic module ..... Page 23
- Roller ..... Page 23
- Photocell set ..... Page 24
- Carriage pulling support ..... Page 24
- Unlocking device kit ..... Page 24
- Sill ..... Page 25
- Electrical wires ..... Page 28

1.2 Mechanical model

- Motor ..... Page 29
- Drive arm assembly ..... Page 30
- Pulley ..... Page 30
- Motor pulley ..... Page 31
- Skate assembly ..... Page 31
- Cabin locking device assembly ..... Page 32
- Release cam assembly ..... Page 32
- Belt ..... Page 32
- Roller ..... Page 33
- End stroke stop ..... Page 33
- Cable fastener assembly ..... Page 33
- Electrical contact assembly ..... Page 34
- Skate drive cam ..... Page 34
- Sill ..... Page 35
- Retainer clamp assembly ..... Page 38
- Retainer clamp ..... Page 38
- Retainer rod ..... Page 38
- Capacitor ..... Page 39
- Microswitch operator pulley cam ..... Page 39
- Clear opening regulator assembly ..... Page 39
- Pulley arm stop ..... Page 40
- Microswitch electrical contact ..... Page 40

1.3 Folding model

- Motor ..... Page 41
- Motor pulley ..... Page 42
- Pulley ..... Page 42
- Drive arm assembly ..... Page 42
- Electrical contact assembly ..... Page 43
- Belt ..... Page 43
- Ball-Joint ..... Page 43
- Bushing ..... Page 44
- Sill ..... Page 44
- Sill support ..... Page 44
- Electrical wiring ..... Page 45
- Microswitch electrical contact ..... Page 46
- Operator shaft ..... Page 46
- Microswitch operation shaft cam ..... Page 46
- Hinge ..... Page 47
- Belt guide ..... Page 47
- Handle ..... Page 47
- Lock assembly ..... Page 48
- Clutch assembly ..... Page 48
- Cam ..... Page 48
- Capacitor ..... Page 49
- Folding door model panel guide shoe assembly ..... Page 49

1.4 Cabin accessories

- Drive cam assembly ..... Page 51
- Toe guard mechanic and VVVF models ..... Page 52
- Retractable toe guard ..... Page 52
- Folding toe guard ..... Page 53
- Glass ..... Page 53
- Emergency power supply SAI ..... Page 53
- Emergency power supply ..... Page 54
- Photocell curtain ..... Page 54
- Photocell curtain support assembly ..... Page 55
- C2T electronic module ..... Page 55
- Fuse ..... Page 55
- VVVF & mechanical model panel guide shoe assembly ..... Page 56
- Folding door model panel guide shoe assembly ..... Page 56
- Operator fastening bracket set ..... Page 56
- Panel regulator support ..... Page 57
- Sill support ..... Page 57
- Terminal strip ..... Page 58
- Rubber stop ..... Page 58
- HTD belt regulation tool ..... Page 58
- Lock beak regulation tool ..... Page 59
- Top-track ..... Page 59
- Labels ..... Page 61

Fermator
AUTOMATIC DOORS FOR LIFTS

2. Landing Doors

2.1 Automatic model

2.1.1 Mechanism:
- Lock beak-plate assembly ..... Page 65
- Rollers holder plate assembly ..... Page 66
- Lock beak assembly ..... Page 67
- Lock beak support ..... Page 67
- Lock contact support assembly ... Page 68
- Electrical contact assembly ..... Page 69
- Roller ..... Page 69
- Safety spring ..... Page 69
- Syncronisation cable ..... Page 70
- Cable fastener assembly ..... Page 70
- Safety spring fastening support ... Page 70

2.1.2 Frame:
- Sill support console ..... Page 71
- Toe guard ..... Page 71
- Sill ..... Page 72
- Sill suplement ..... Page 72

2.1.3 Accessories:
- Frame fastening bracket set ..... Page 73
- Jamb fixing support accessory set ..... Page 74
- Release lock accessory assembly ..... Page 74
- Triangular key accessory set ..... Page 74
- Modernisation installing tool ..... Page 75
- Rubber stop ..... Page 75
- Panel accessories set ..... Page 75
- Panel regulator support accessories set ..... Page 76
- Panel guide shoe accessories set ..... Page 76
- Pulling roller accessories set ..... Page 76
- Top-track ..... Page 77
- Header ..... Page 79
- Lock beak rubber stop ..... Page 80
- Lightcover with release lock ..... Page 81
- Electrical contact support assembly ..... Page 82
- Glass ..... Page 82

2.2 Semiautomatic model

2.2.1 Frame:
- Locking device ..... Page 83
- Rubber stop ..... Page 84

2.2.2 Panel:
- Door closer ..... Page 85
- Vision frame ..... Page 85
- Vision glass ..... Page 86
- Big vision glass ..... Page 86
- Vision clamp accessories set ..... Page 86
- Hinge strip set ..... Page 87
- Handle ..... Page 87
- Push plate ..... Page 87
- Contact bridge ..... Page 88
- Plunger ..... Page 88

3. Annexes

- Clear opening table ..... Page 91
- Syncronisation cable length by by clear opening and model ..... Page 92
- Sill finishes table ..... Page 94
- Sill track position ..... Page 94
- Safety spring length by clear opening and model ..... Page 95
- Finishes table ..... Page 95
- Locking device driving ..... Page 96
- Terminals table ..... Page 96
- Light cover contact table ..... Page 96

4. Order form

- Order form ..... Page 101

Fermator
AUTOMATIC DOORS FOR LIFTS

Fermator
AUTOMATIC DOORS FOR LIFTS

To make the catalogue easy to use the spare parts have been grouped into categories assigning a pre-fix code to each category.

Each category has its own 3D illustration. When ordering please follow the guidelines given below.

1.- Index

In the index there are four sections that make up the spare parts catalogue with its corresponding subsections:

1. CABIN
- VVVF Model
- Mechanical Model
- Folding Model
- Accesories

2. LANDING
- Automatic Model
- Semiautomatic Model

3. ANNEXES

4. ORDER FORM

2.- Coding explanation and guidelines

In the catalogue you will find two types of codes:

- With the code defined fully the price shown is the final price.

Category **CDL**

Contact and lock skate assembly

VF00.CC600	Contact and lock skate assembly. C6H.
VF00.CC800	Contact and lock skate assembly. C8H.

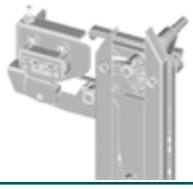

- When the code requires further information the price shown is the base price to which other “costs” will be added as the code is fully entered.

Category **PCG**

Top track

C2H

40	See Annexe 4	.CC2ZN	See Annexe 1	40/10 Model.
50	See Annexe 4	.CC2ZN	See Annexe 1	50/11 Model.

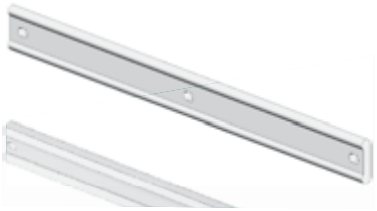

In this latter case, to determine the final price it is necessary to complete the parameters that are missing in the code. Using the Annexe that the guideline indicates you must multiply the base price by the ratio shown in the Annexe. This will give the final price, however, if the guideline refers to two annexes you should increase the base price by the ratio shown in the first annexe and then multiply the resultant figure by the ratio shown in the second annexe to arrive at the correct final price.

Annexe and calculation of the final price:

FINISH	CODE	RATIO
Stainless Steel	**XN**	1,25
Epoxy	**IM**	1

Final price = *Base price* x *Annexe 1 Ratio* x *Annexe 2 Ratio*

3.- Order forms

For example:- To price a 40/10 top track to suit two panel centre parting of 1100mm clear opening – base price 38.70€ x annexe 4 (no ratio shown) = 38.70€ x annexe 1 (ratio shown adjacent to 1100mm clear opening is 1.38) hence 38.70€ x 1.38 = 53.41€

To order the above track. Category **PCG, 40** plus annexe 4 = C2H code **00**, so **4000**, then **CC2ZN** (as shown), plus Annexe 1 = 1100mm. code is **1100**.

Full order number is Quantity required in the first box, then:

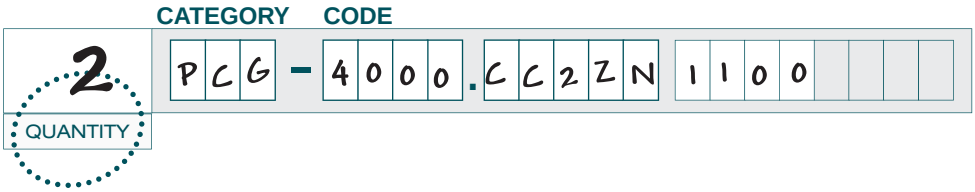

Once the full code has been obtained it should be entered in the spaces provided on the order forms shown in section 4 of the catalogue. (Order Forms).

Finally it should always contain the quantity required entered into the first box marked " Quantity" against each type of spare part required. Send the form by fax to 0034977771615 or by e-mail to commercial@fermator.com.

4.- Delivery dates

The delivery date of spare parts will vary depending on the availability of each piece.

- Spare parts in Stock: Require a minimum period of delivery.

- Spare parts to be manufactured: Need to be fabricated and therefore require a longer delivery period.

In some categories this availability is shown in the guideline coding (along the top title bar showing the category code name) whilst in others it is shown in Section 3 Annexe table 3

Fermator
AUTOMATIC DOORS FOR LIFTS

1

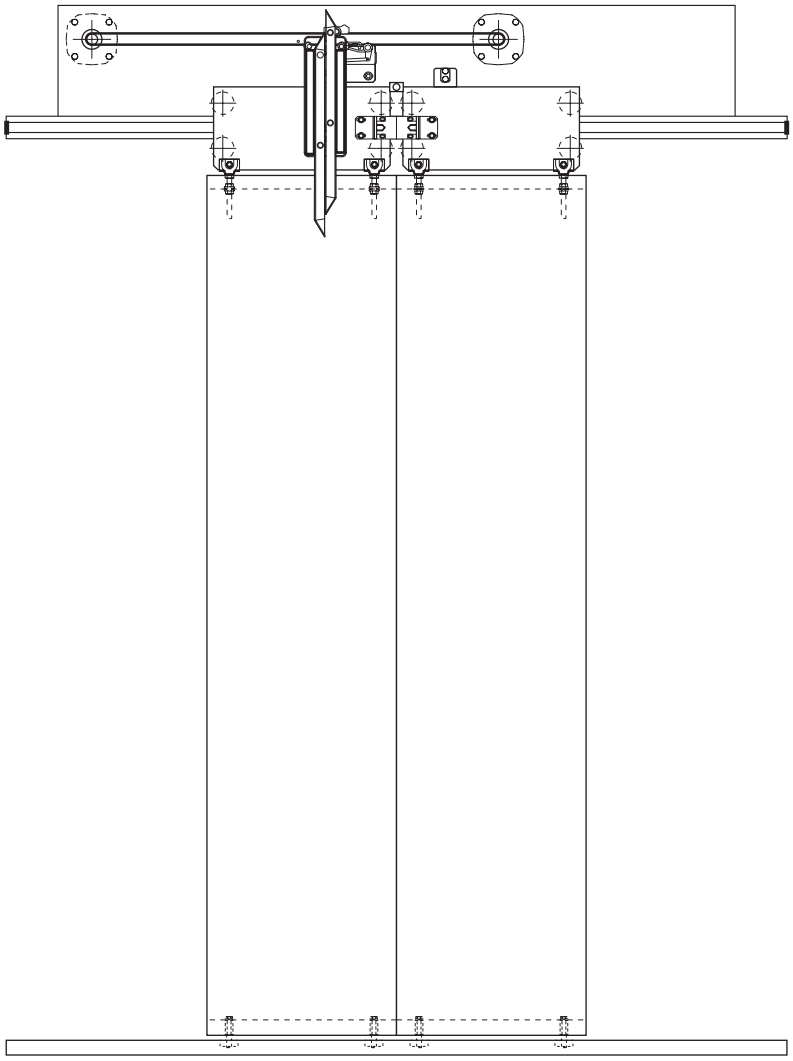

Cabin

1.1 VVVF model.
1.2 Mechanical model.
1.3 Folding model.
1.4 Cabin accesories.

1.1

Cabin

VVVF model

Category **PMT**

Motor

VF00.C0000	VVVF with encoder motor.
VFAD.C0000	VVVF with encoder IP-67 flameproof model motor.
VFIP.C0000	VVVF with encoder IP-54 model motor.
VFSE.C0000	VVVF without encoder motor.
VFSA.C0000	VVVF without encoder IP-67 flameproof model motor.
VFSI.C0000	VVVF without encoder IP-54 model motor.

Category **VMT**

Encoder

VFEN.C0000	Encoder circuit.

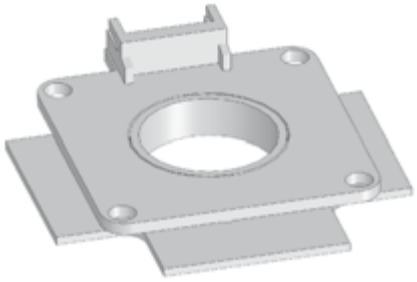

PPM Category

Motor pulley

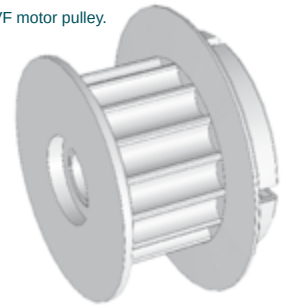
VVVF motor pulley.

VF00.C0000	VVVF motor pulley.

HOC Category

Motor support

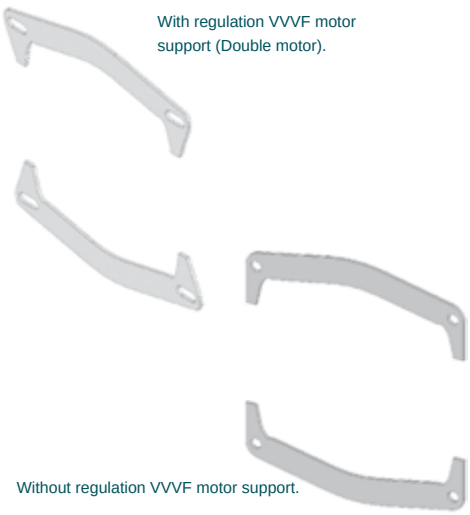
With regulation VVVF motor support (Double motor).
Without regulation VVVF motor support.

VFSC.C0000	Without regulation VVVF motor support.
VFSM.C0000	With regulation VVVF motor support (Double motor).

CSK Category

Skate assembly

VF00.CD000	Standard skate assembly. Right opening.
VF00.CI000	Standard skate assembly. Left opening.
5R00.CD000	For glazed panels skate assembly. Right opening.
5R00.CI000	For glazed panels skate assembly. Left opening.
AA00.CD000	Pre-opening skate assembly. Right opening.
AA00.CI000	Pre-opening skate assembly. Left opening.
D005.CD000	50mm displaced skate assembly. Right opening.

fax.: +34 977 771 615 | e-mail: comercial@fermator.com | www.fermator.com

Category **CSK**

Skate assembly

D005.CI000	50mm displaced skate assembly. Left opening.
D010.CD000	100mm displaced skate assembly. Right opening.
D010.CI000	100mm displaced skate assembly. Left opening.
D015.CD000	150mm displaced skate assembly. Right opening
D015.CI000	150mm displaced skate assembly. Left opening.
ESA1.CD000	Operation zone 100mm skate asssembly. Right opening.
ESA1.CI000	Operation zone 100mm skate asssembly. Left opening.
4V00.CC400	Standard skate assembly C4H. 40/10 VF Model. PL 600 - 915.
5000.CC400	Standard skate assembly C4H. 50/11 VF Model. PL 600 - 915.
DS00.CD000	RAC 250 model skate assembly. Right opening.
DS00.CI000	RAC 250 model skate assembly. Left opening.

Category **DSK**

Connecting rod rubber stop

VFTB.C0000	Connecting rod rubber stop.

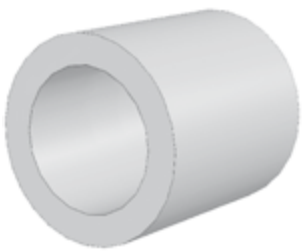

CSK

Category

Q model skate assembly for special height cabins

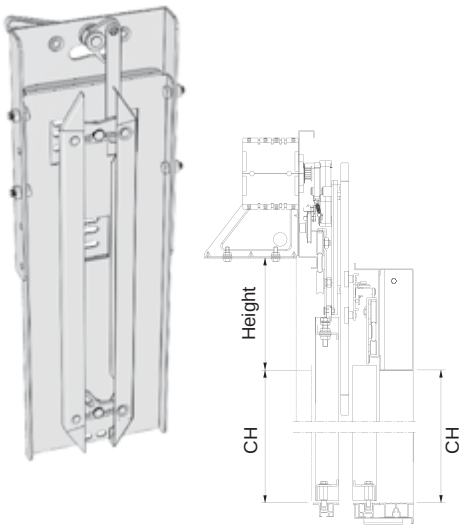

Right opening

Q001.CD000	Q model skate assembly Height: 320mm.
Q002.CD000	Q model skate assembly Height: 370mm.
Q003.CD000	Q model skate assembly Height: 420mm.
Q004.CD000	Q model skate assembly Height: 470mm.
Q005.CD000	Q model skate assembly Height: 520mm.
Q006.CD000	Q model skate assembly Height: 570mm.
Q007.CD000	Q model skate assembly Height: 620mm.
Q008.CD000	Q model skate assembly Height: 670mm.
Q009.CD000	Q model skate assembly Height: 720mm.
Q010.CD000	Q model skate assembly Height: 770mm.
Q011.CD000	Q model skate assembly Height: 820mm.
Q012.CD000	Q model skate assembly Height: 870mm.
Q013.CD000	Q model skate assembly Height: 920mm.
Q014.CD000	Q model skate assembly Height: 970mm.
Q015.CD000	Q model skate assembly Height: 1020mm.
Q016.CD000	Q model skate assembly Height: 1070mm.

Left opening

Q001.CI000	Q model skate assembly Height: 320mm.
Q002.CI000	Q model skate assembly Height: 370mm.
Q003.CI000	Q model skate assembly Height: 420mm.
Q004.CI000	Q model skate assembly Height: 470mm.
Q005.CI000	Q model skate assembly Height: 520mm.
Q006.CI000	Q model skate assembly Height: 570mm.
Q007.CI000	Q model skate assembly Height: 620mm.
Q008.CI000	Q model skate assembly Height: 670mm.
Q009.CI000	Q model skate assembly Height: 720mm.

fax.: +34 977 771 615 | e-mail: comercial@fermator.com | www.fermator.com

Category **CSK**

Q model skate assembly for special height cabins

Q010.CI000	Q model skate assembly Height: 770mm.
Q011.CI000	Q model skate assembly Height: 820mm.
Q012.CI000	Q model skate assembly Height: 870mm.
Q013.CI000	Q model skate assembly Height: 920mm.
Q014.CI000	Q model skate assembly Height: 970mm.
Q015.CI000	Q model skate assembly Height: 1020mm.
Q016.CI000	Q model skate assembly Height: 1070mm.

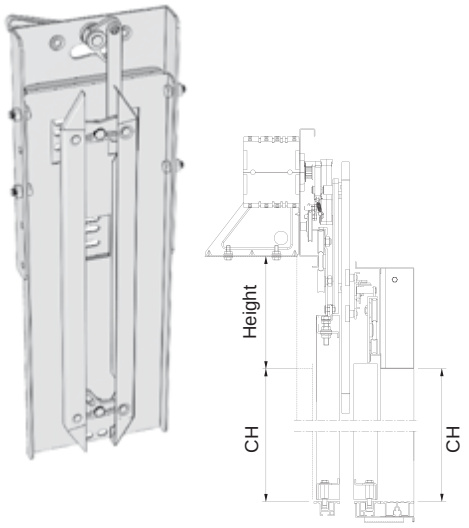

Category **CDL**

Contact and lock skate assembly

VF00.CC200	Contact and lock skate assembly. C2H.
5000.CC400	Contact and lock skate assembly. C4H 50/11 model CO from 600 to 915mm.
4V00.CC400	Contact and lock skate assembly. C4H 40/10 model CO from 600 to 915mm.
VF00.CC400	Contact and lock skate assembly. C4H 40/10 and 50/11 model CO from 950 to 1100mm.
VFES.CC400	Contact and lock skate assembly. C4H 40/10 and 50/11 model CO from 1150mm.
VF00.CC600	Contact and lock skate assembly. C6H.
VF00.CC800	Contact and lock skate assembly. C8H.
VF00.CD000	Contact and lock skate assembly. T1H to T4H right opening.
VF00.CI000	Contact and lock skate assembly. T1H to T4H left opening.
0D00.CD000	Contact and lock skate assembly. T1H to T4H DIN model right opening.
0D00.CI000	Contact and lock skate assembly. T1H to T4H DIN model left opening.

CSL Category

Cabin locking device assembly

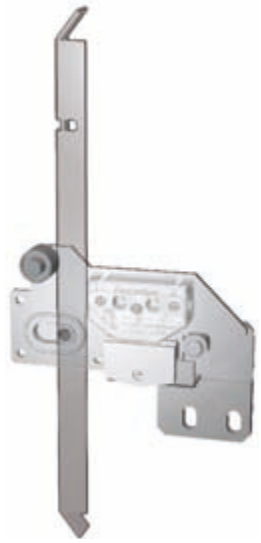

5000.CC200	Cabin locking device assembly. VVVF 50/11 model. C2H. Sill:54mm.
4V00.CC200	Cabin locking device assembly. VVVF 40/10 model. C2H. Sill:54mm.
50IP.CC200	Cabin locking device assembly IP-54. VVVF 50/11 model. C2H. Sill:54mm.
5000.CD200	Cabin locking device assembly. VVVF 50/11 model. T2H. Sill:90mm. right
4V00.CD200	Cabin locking device assembly. VVVF 40/10 model. T2H. Sill:90mm. right
4V70.CD200	Cabin locking device assembly. VVVF 40/10 model. T2H. Sill:70mm. right
5000.CI200	Cabin locking device assembly. VVVF 50/11 model. T2H. Sill:90mm. left
4V00.CI200	Cabin locking device assembly. VVVF 40/10 model. T2H. Sill:90mm. left
4V70.CI200	Cabin locking device assembly. VVVF 40/10 model. T2H. Sill:70mm. left
5000.CD300	Cabin locking device assembly. VVVF 50/11 model. T3H. Sill:135mm. right.
4V90.CD300	Cabin locking device assembly. VVVF 40/10 model. T3H. Sill:90mm. right.
4V00.CD300	Cabin locking device assembly. VVVF 40/10 model. T3H. Sill:135mm. right.
5000.CI300	Cabin locking device assembly. VVVF 50/11 model. T3H. Sill:135mm. left.
4V90.CD300	Cabin locking device assembly. VVVF 40/10 model. T3H. Sill:90mm. left.
4V00.CI300	Cabin locking device assembly. VVVF 40/10 model. T3H. Sill:135mm. left.

CLA Category

Release cam assembly

ECAE.RC000	Cabin release cam. For central doors with automatic door outside.
ECSE.RC000	Cabin release cam. For central doors with semiautomatic door outside.
ECAE.RD000	Cabin release cam. For telescopic doors, right opening, with automatic door outside.
ECSE.RD000	Cabin release cam. For telescopic doors, right opening, with semiautomatic door outside.
ECAE.RI000	Cabin release cam. For telescopic doors, left opening, with automatic door outside.
ECSE.RI000	Cabin release cam. For telescopic doors, left opening, with semiautomatic door outside.

fax.: +34 977 771 615 | e-mail: comercial@fermator.com | www.fermator.com

Category **DSK**

Pulling trigger

VFGA.C0000	Pulling trigger.

Category **RSK**

Pulling trigger spring

VF00.C0000	Pulling trigger spring.

Category **RSK**

Connecting rod spring

00BP.CT200	Connecting rod spring for skate with locking device.

PPR Category

Idle pulley

VF00.C0000	Idle pulley.

CPR Category

Idle pulley tensioner assembly

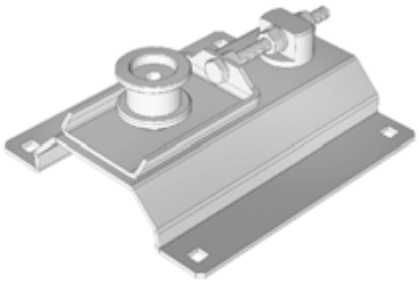

VF54.C0000	Idle pulley tensioner assembly, Sill: 54mm.
VF70.C0000	Idle pulley tensioner assembly, Sill: 70mm.
VF90.C0000	Idle pulley tensioner assembly, Sill: 90mm. Except T3H ≤ 1100mm. & C4H ≤ 700mm.
VF90.CT3ST	Idle pulley tensioner assembly, T3H Sill: 90mm. PL ≤ 1100mm.
VF90.CC4ST	Idle pulley tensioner assembly, C4H Sill: 90mm. PL ≤ 700mm.
VF13.CT3ST	Idle pulley tensioner assembly, T3H Sill: 135mm. PL ≤ 1100mm.
VF13.CT300	Idle pulley tensioner assembly, T3H Sill: 135mm. PL > 1100mm.
VF18.C0000	Idle pulley tensioner assembly, C8H & T4H Sill: 180mm.

*Attention: For 54mm. sill assembly is supplied without support.

fax.: +34 977 771 615 | e-mail: comercial@fermator.com | www.fermator.com

Category **CTR**

Stopping retainer assembly

VF54.CD000	Stopping retainer assembly. Sill: 54mm. T1H right opening.
VF54.CI000	Stopping retainer assembly. Sill: 54mm. C2H-T1H left opening.
VF70.CD200	Stopping retainer assembly. Sill: 70mm. T2H right opening.
VF70.CI200	Stopping retainer assembly. Sill: 70mm. T2H left opening.
VF70.CC400	Stopping retainer assembly. Sill: 70mm. C4H.
VF70.CD300	Stopping retainer assembly. Sill: 70mm. T3H right opening.
VF70.CI300	Stopping retainer assembly. Sill: 70mm. T3H left opening.
VF00.CD000	Stopping retainer assembly. T2H Sill: 90mm. or T3H Sill: 135mm. or T3H Sill: 180mm. Right opening.
VF00.CI000	Stopping retainer assembly. T2H Sill: 90mm. or T3H Sill: 135mm. or T3H Sill: 180mm. Left opening.
VF90.CC400	Stopping retainer assembly. Sill: 90mm. C4H CO from 600 to 915mm.
VF91.CC400	Stopping retainer assembly. Sill: 90mm. C4H CO from 950 to 1150mm.
VF92.CC400	Stopping retainer assembly. Sill: 90mm. C4H CO > 1150mm.
VF13.CC600	Stopping retainer assembly. Sill: 135mm. C6H.
VF18.CC800	Stopping retainer assembly. Sill: 180mm. C8H.

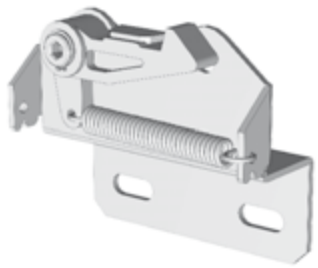

Category **PTR**

Stopping retainer trigger

VF00.C0000	Stopping retainer trigger.

RTR Category

Stopping retainer spring

VF00.C0000	Stopping retainer spring.

STR Category

Stopping retainer support sub assembly

VF54.CD000	Stopping retainer sub assembly. Sill: 54mm. T1H right opening.
VF54.CI000	Stopping retainer sub assembly. Sill: 54mm. C2H-T1H left opening.
VF70.CD200	Stopping retainer sub assembly. Sill: 70mm. T2H right opening.
VF70.CI200	Stopping retainer sub assembly. Sill: 70mm. T2H left opening.
VF70.CC400	Stopping retainer sub assembly. Sill: 70mm. C4H.
VF70.CD300	Stopping retainer sub assembly. Sill: 70mm. T3H right opening.
VF70.CI300	Stopping retainer sub assembly. Sill: 70mm. T3H left opening.
VF00.CD000	Stopping retainer sub assembly. T2H Sill: 90mm. or T3H Sill: 135mm. or T3H Sill: 180mm. Right opening.
VF00.CI000	Stopping retainer sub assembly. T2H Sill: 90mm. or T3H Sill: 135mm. or T3H Sill: 180mm. Left opening.
VF90.CC400	Stopping retainer sub assembly. Sill: 90mm. C4H CO from 600 to 915mm.
VF91.CC400	Stopping retainer sub assembly. Sill: 90mm. C4H CO from 950 to 1150mm.
VF92.CC400	Stopping retainer sub assembly. Sill: 90mm. C4H CO > 1150mm.
VF13.CC600	Stopping retainer sub assembly. Sill: 135mm. C6H.
VF18.CC800	Stopping retainer sub assembly. Sill: 180mm. C8H.

fax.: +34 977 771 615 | e-mail: comercial@fermator.com | www.fermator.com

Category **BHT**

Toothed belt

According to the door

VF00.CC200	See Annexe 1	Toothed belt HTD 5-M. C2H door.
VF00.CC400	See Annexe 1	Toothed belt HTD 5-M. C4H door.
VF00.CC600	See Annexe 1	Toothed belt HTD 5-M. C6H door.
VF00.CC800	See Annexe 1	Toothed belt HTD 5-M. C8H door.
VF00.CT100	See Annexe 1	Toothed belt HTD 5-M. T1H door.
VF00.CT200	See Annexe 1	Toothed belt HTD 5-M. T2H door.
VF00.CT300	See Annexe 1	Toothed belt HTD 5-M. T3H door.
VF00.CT400	See Annexe 1	Toothed belt HTD 5-M. T4H door.

Attention: To complete this code, see Annexe 1 (Clear Opening).
The related price is valid for CO: 800mm.

By Metres

VF00.C0000	Quantity	Toothed belt HTD 5-M.

Attention: In *Quantity field*, show the metres needed preceded by 0 until complete 4 figures.

Category **KCE**

Electrical contact assembly

6000.00000	Electrical contact assembly. 60mm.
5000.00000	Electrical contact assembly. 50mm.
4000.00000	Electrical contact assembly. 40mm.
IP54.00000	Electrical contact assembly. IP-54.
IP67.C0000	Electrical contact assembly. IP-67.

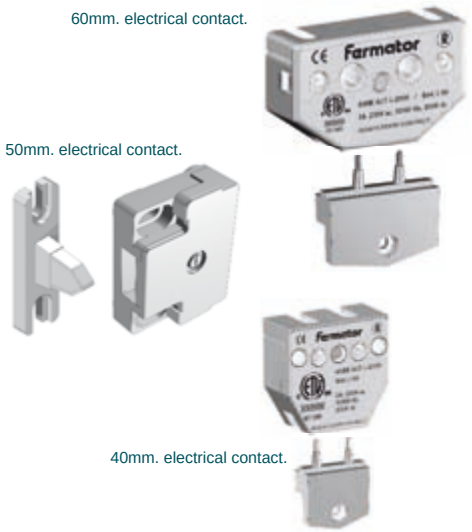

Category
PTF
End stroke stop

0000.C0000	End stroke stop.

Category
CHT
Toothed belt base assembly

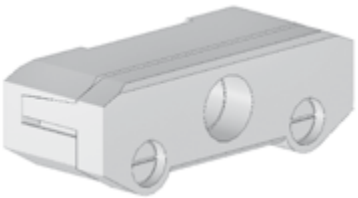

VF00.C0000	HTD Toothed belt base assembly.

Category
CAM
Cable fastener assembly

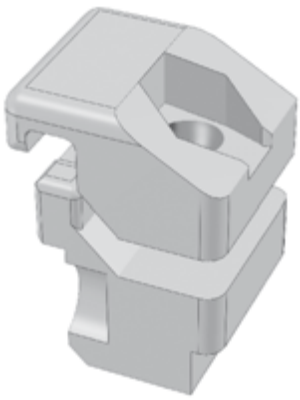

00AL.00000	Aluminium cable fastener assembly.

Category **PCA**

Syncronisation cable

0000.	See Annexe 2	Syncronisation cable.

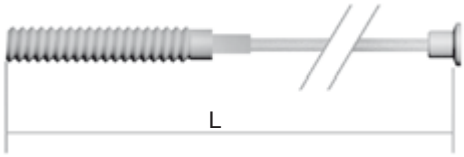

Attention: To complete this code, see Annexe 1 (Clear Opening).
The related price is valid for CO: 800mm.

Category **VCP**

Programming console

VFCP.C00ES	Programming console. Spanish.
VFCP.C00EN	Programming console. English.
VFCP.C00FR	Programming console. French.
VFCP.C00DE	Programming console. German.

Category **VCI**

VVVF electronic module

VF4	See Annexe 12	.CD0EE	VVVF electronic module. Right opening. Spanish-English language.
VF4	See Annexe 12	.CD0FR	VVVF electronic module. Right opening. French language.
VF4	See Annexe 12	.CD0DE	VVVF electronic module. Right opening. German language.
VF4	See Annexe 12	.CI0EE	VVVF electronic module. Left opening. Spanish-English language.
VF4	See Annexe 12	.CI0FR	VVVF electronic module. Left opening. French language.
VF4	See Annexe 12	.CI0DE	VVVF electronic module. Left opening. German language.

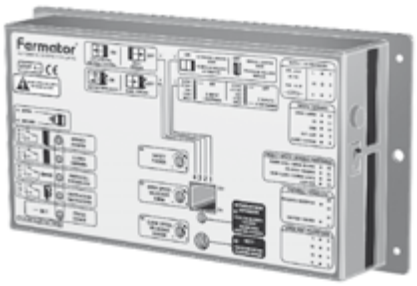

Attention: To complete this code, see Annexe 12 (VVVF Options).
The related price is without options.

CFT Category

Photocell set

FC00.C0000	VVVF cabin photocell set. Standard Operator (Length 3000mm.).
FCDM.C0000	VVVF cabin photocell set. Big CO Operator (Length 5000mm.).

PFR Category

Roller

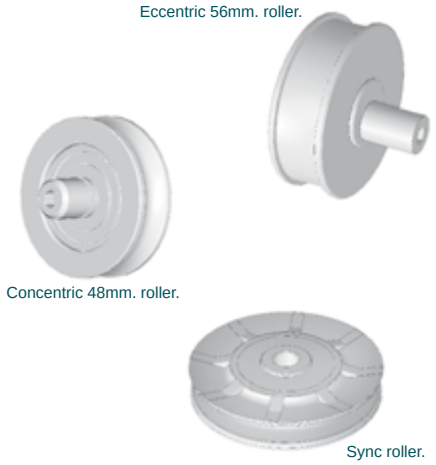

0100.00000	Concentric upper roller. PFR-01 Cabin-Landing 40/10. Ø 48mm.
0500.00000	Concentric upper roller. PFR-05 Cabin-Landing 50/11. Ø 56mm.
0300.00000	Eccentric lower roller. PFR-03 Cabin 40/10. Ø 48mm.
0200.00000	Eccentric lower roller. PFR-02 Cabin 40/10 T3H Sill: 90mm. Ø 48mm.
0600.00000	Eccentric lower roller. PFR-06 Cabin-Landing 50/11. Ø 54mm.
0800.00000	Sync roller. PFR-08 Cabin-Landing 40/10. Ø 47mm. Inside Ø 6mm.
0900.00000	Sync roller. PFR-09 Cabin-Landing 40/10. Ø 47mm. Inside Ø 8mm.
0700.00000	Sync roller. PFR-07 Cabin-Landing 40/10. Ø 64mm.
1000.00000	Sync roller. PFR-10 Cabin T3H 40/10 VVVF. Ø 42mm.
0050.00000	Sync roller. Spare part. Ø 50mm.
0060.00000	Sync roller. Spare part. Ø 60mm.

fax.: +34 977 771 615 | e-mail: comercial@fermator.com | www.fermator.com

Sill

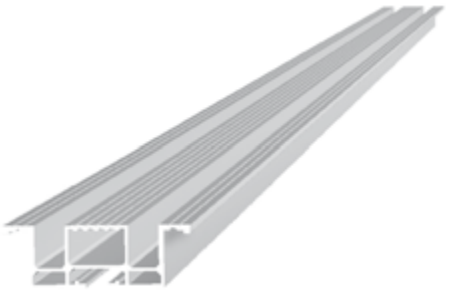

C2H

54AE.CC2	See Annexe 3	See Annexe 1	Width: 54mm. Automatic door outside.
54SE.CC2	See Annexe 3	See Annexe 1	Width: 54mm. Semiautomatic door outside.

C4H

70AE.CC4	See Annexe 3	See Annexe 1	Width: 70mm. Automatic door outside.
70SE.CC4	See Annexe 3	See Annexe 1	Width: 70mm. Semiautomatic door outside.
75AE.CC4	See Annexe 3	See Annexe 1	Width: 75mm. Automatic door outside.
75SE.CC4	See Annexe 3	See Annexe 1	Width: 75mm. Semiautomatic door outside.
80AE.CC4	See Annexe 3	See Annexe 1	Width: 80mm. (30 + 50). Automatic door outside.
80SE.CC4	See Annexe 3	See Annexe 1	Width: 80mm. (30 + 50). Semiautomatic door outside.
90AE.CC4	See Annexe 3	See Annexe 1	Width: 90mm. (40 + 40). Automatic door outside.
90SE.CC4	See Annexe 3	See Annexe 1	Width: 90mm. (40 + 40). Semiautomatic door outside.
9SEA.CC4	See Annexe 3	See Annexe 1	Width: 90mm. (30 + 50). Automatic door outside.
9ESE.CC4	See Annexe 3	See Annexe 1	Width: 90mm. (30 + 50). Semiautomatic door outside.

C6H

70AE.CC6	See Annexe 3	See Annexe 1	Width: 70mm. Automatic door outside.
70SE.CC6	See Annexe 3	See Annexe 1	Width: 70mm. Semiautomatic door outside.
90AE.CC6	See Annexe 3	See Annexe 1	Width: 90mm. Automatic door outside.
90SE.CC6	See Annexe 3	See Annexe 1	Width: 90mm. Semiautomatic door outside.
11AE.CC6	See Annexe 3	See Annexe 1	Width: 115mm. Automatic door outside.
11SE.CC6	See Annexe 3	See Annexe 1	Width: 115mm. Semiautomatic door outside.
13AE.CC6	See Annexe 3	See Annexe 1	Width: 135mm. Automatic door outside.
13SE.CC6	See Annexe 3	See Annexe 1	Width: 135mm. Semiautomatic door outside.

C8H

14AE.CC8	See Annexe 3	See Annexe 1	Width: 140mm. Automatic door outside.
14SE.CC8	See Annexe 3	See Annexe 1	Width: 140mm. Semiautomatic door outside.
18AE.CC8	See Annexe 3	See Annexe 1	Width: 180mm. Automatic door outside.
18SE.CC8	See Annexe 3	See Annexe 1	Width: 180mm. Semiautomatic door outside.

! Attention: To complete this code, see Annexe 1 (Clear Opening) and Annexe 3 (Sill material)
The related price is valid for Aluminium sill CO: 800mm.

... it follows on page 26. →

PPS Category

Sill

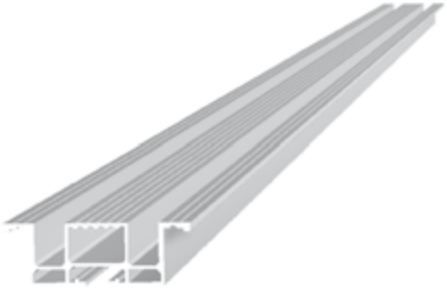

T1H

54AE.CT1	See Annexe 3	See Annexe 1	Width: 54mm. Automatic door outside.
54SE.CD1	See Annexe 3	See Annexe 1	Width: 54mm. Right opening. Semiautomatic door outside.
54SE.CI1	See Annexe 3	See Annexe 1	Width: 54mm. Left opening. Semiautomatic door outside.

T2H

70AE.CT2	See Annexe 3	See Annexe 1	Width: 70mm. Automatic door outside.
70SE.CD2	See Annexe 3	See Annexe 1	Width: 70mm. Right opening. Semiautomatic door outside.
70SE.CI2	See Annexe 3	See Annexe 1	Width: 70mm. Left opening. Semiautomatic door outside.
75AE.CT2	See Annexe 3	See Annexe 1	Width: 75mm. Automatic door outside.
75SE.CD2	See Annexe 3	See Annexe 1	Width: 75mm. Right opening. Semiautomatic door outside.
75SE.CI2	See Annexe 3	See Annexe 1	Width: 75mm. Left opening. Semiautomatic door outside.
80AE.CT2	See Annexe 3	See Annexe 1	Width: 80mm. (30 + 50). Automatic door outside.
80SE.CD2	See Annexe 3	See Annexe 1	Width: 80mm. (30 + 50) Right op. Semiautomatic door outside.
80SE.CI2	See Annexe 3	See Annexe 1	Width: 80mm. (30 + 50) Left op. Semiautomatic door outside.
90AE.CT2	See Annexe 3	See Annexe 1	Width: 90mm. (40 + 40). Automatic door outside.
90SE.CD2	See Annexe 3	See Annexe 1	Width: 90mm. (40 + 40) Right op. Semiautomatic door outside.
90SE.CI2	See Annexe 3	See Annexe 1	Width: 90mm. (40 + 40) Left op. Semiautomatic door outside.
9SSE.CD2	See Annexe 3	See Annexe 1	Overlaid. Ap. derecha. Semiautomatic door outside.
9SSE.CI2	See Annexe 3	See Annexe 1	Overlaid. Ap. izquierda. Semiautomatic door outside.
9ESE.CD2	See Annexe 3	See Annexe 1	Width: 90mm. (30 + 50). Right op. Semiautomatic door outside.
9ESE.CI2	See Annexe 3	See Annexe 1	Width: 90mm. (30 + 50). Left op. Semiautomatic door outside.

Attention: To complete this code, see Annexe 1 (Clear Opening) and Annexe 3 (Sill material)
The related price is valid for Aluminium sill CO: 800mm.

... it follows on page 27. →

fax.: +34 977 771 615 | e-mail: comercial@fermator.com | www.fermator.com

Sill

T3H

70AE.CT3	See Annexe 3	See Annexe 1	Width: 70mm. Automatic door outside.
70SE.CD3	See Annexe 3	See Annexe 1	Width: 70mm. Right opening. Semiautomatic door outside.
70SE.CI3	See Annexe 3	See Annexe 1	Width: 70mm. Left opening. Semiautomatic door outside.
90AE.CT3	See Annexe 3	See Annexe 1	Width: 90mm. Automatic door outside.
90SE.CD3	See Annexe 3	See Annexe 1	Width: 90mm. Right opening. Semiautomatic door outside.
90SE.CI3	See Annexe 3	See Annexe 1	Width: 90mm. Left opening. Semiautomatic door outside.
11AE.CT3	See Annexe 3	See Annexe 1	Width: 115mm. Automatic door outside.
11SE.CD3	See Annexe 3	See Annexe 1	Width: 115mm. Right opening. Semiautomatic door outside.
11SE.CI3	See Annexe 3	See Annexe 1	Width: 115mm. Left opening. Semiautomatic door outside.
13AE.CT3	See Annexe 3	See Annexe 1	Width: 135mm. Automatic door outside.
13SE.CD3	See Annexe 3	See Annexe 1	Width: 135mm. Right opening. Semiautomatic door outside.
13SE.CI3	See Annexe 3	See Annexe 1	Width: 135mm. Left opening. Semiautomatic door outside.

T4H

14AE.CT4	See Annexe 3	See Annexe 1	Width: 140mm. Automatic door outside.
14SE.CD4	See Annexe 3	See Annexe 1	Width: 140mm. Right opening. Semiautomatic door outside.
14SE.CI4	See Annexe 3	See Annexe 1	Width: 140mm. Left opening. Semiautomatic door outside.
18AE.CT4	See Annexe 3	See Annexe 1	Width: 180mm. Automatic door outside.
18SE.CD4	See Annexe 3	See Annexe 1	Width: 180mm. Right opening. Semiautomatic door outside.
18SE.CI4	See Annexe 3	See Annexe 1	Width: 180mm. Left opening. Semiautomatic door outside.

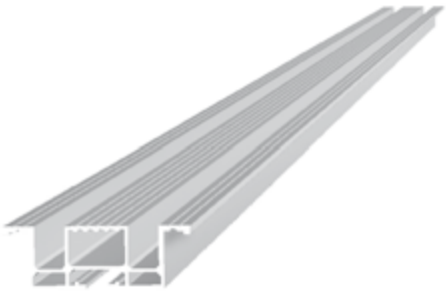

Attention: To complete this code, see Annexe 1 (Clear Opening) and Annexe 3 (Sill material)
The related price is valid for Aluminium sill CO: 800mm.

WCE Category

Electrical wires

VFCS.CT000	0550	Series electrical wires. Telescopic doors.
VFCS.CC000	0885	Series electrical wires. Central doors.
VFC1.C0000	0320	Emergency power supply control electrical wires. C4 CO 600 to 1100 and T3 CO 600 to 700.
VFC1.C0000	0125	Emergency power supply control electrical wires. Other models.
VFCE.C0000	0125	Emergency power supply electrical wires. C4 CO 600 to 1100 and T3 CO 600 to 700.
VFCE.C0000	0410	Emergency power supply electrical wires. Other models.
VFEN.C0000	0370	Encoder electrical wires. Standar length (370mm.).
VFEN.C0000	1450	Encoder electrical wires. Special length (1450mm.).
VFEN.C0000	4000	Encoder electrical wires. Henseler length (4000mm.).

PSA Category

Carriage pulling support

VF00.CC200	VVVF 50/11 model C2H-T1H.
VF00.CT200	VVVF 50/11 model C4H-T2H. T3H sill: 90mm. y T4H sill: 140mm.
VF00.CT300	VVVF 50/11 model T3H-T4H. Except: T3H sill: 90mm. y T4H sill: 140mm.
4V00.CC400	VVVF 40/10 model C4H. Except C4H CO 650.
4VES.CC400	VVVF 40/10 model C4H CO 650.

fax.: +34 977 771 615 | e-mail: comercial@fermator.com | www.fermator.com

Unlocking device kit

0000.C0000	Unlocking device kit for a cabin locking device (CDL).

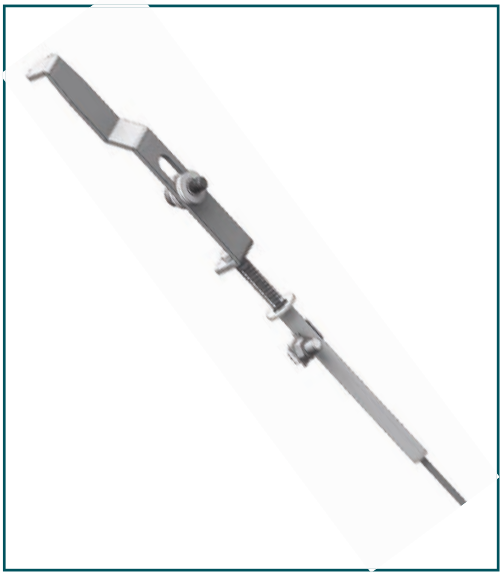

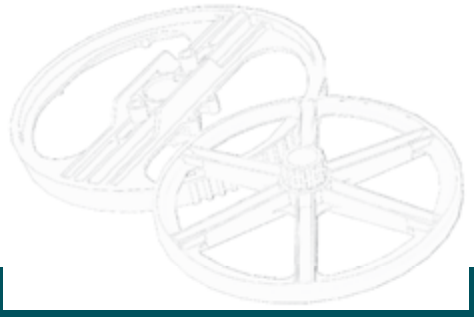

1.2

Cabin

Mechanical Model

Category **PMT**

Motor

1200.C0000	DC 12V motor.
2400.C0000	DC 24V motor.
4800.C0000	DC 48V motor.
M500.C0000	50Hz. monophase AC 230V motor.
M600.C0000	60Hz. monophase AC 230V motor.
M100.C0000	50Hz. monophase AC 125V motor.
T500.C0000	50Hz. triphase AC 230V motor (230/125).
T600.C0000	60Hz. triphase AC 230V motor (230/125).
T700.C0000	50Hz. triphase AC 415V motor (415/230).
T800.C0000	60Hz. triphase AC 415V motor (415/230).

CBA Category

Drive arm assembly

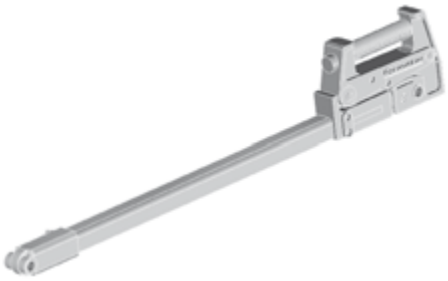

BB	See Annexe 8	.CC200	See Annexe 1	Drive arm assembly. C2H.
BB	See Annexe 8	.CC400	See Annexe 1	Drive arm assembly. C4H.
BB	See Annexe 8	.CC600	See Annexe 1	Drive arm assembly. C6H.
BB	See Annexe 8	.CC800	See Annexe 1	Drive arm assembly. C8H.
BB	See Annexe 8	.CD100	See Annexe 1	Drive arm assembly. T1H. Right opening.
BB	See Annexe 8	.CD200	See Annexe 1	Drive arm assembly. T2H. Right opening.
BB	See Annexe 8	.CD300	See Annexe 1	Drive arm assembly. T3H. Right opening.
BB	See Annexe 8	.CD400	See Annexe 1	Drive arm assembly. T4H. Right opening.
BB	See Annexe 8	.CI100	See Annexe 1	Drive arm assembly. T1H. Left opening.
BB	See Annexe 8	.CI200	See Annexe 1	Drive arm assembly. T2H. Left opening.
BB	See Annexe 8	.CI300	See Annexe 1	Drive arm assembly. T3H. Left opening.
BB	See Annexe 8	.CI400	See Annexe 1	Drive arm assembly. T4H. Left opening.

Attention: To complete this code, see Annexe 8 (Circuit Wiring) & Annexe 1 (Clear Opening).
The related price is valid for CO: 800mm.

PPO Category

Pulley

Central pulley.

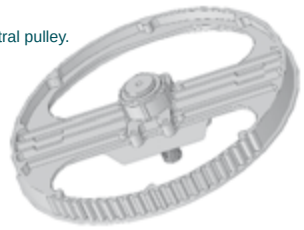

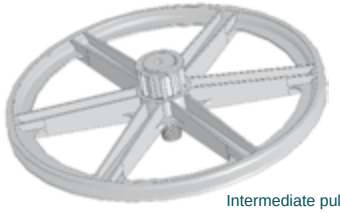

Intermediate pulley.

40PC.C0000	Central.
40PI.C0000	Intermediate.

fax.: +34 977 771 615 | e-mail: comercial@fermator.com | www.fermator.com

Category **PPM**

Motor pulley

4030.C0000	Ø 30mm.
4048.C0000	Ø 48mm.
4058.C0000	Ø 58mm.

Category **CSK**

Skate assembly

4000.CD000	Standard. Right opening.
4000.CI000	Standard. Left opening.
4070.CD200	T2H sill: 70mm. Right opening.
4070.CI200	T2H sill: 70mm. Left opening.
4000.CD300	T3H sill: 90-135mm. Right opening.
4000.CI300	T3H sill: 90-135mm. Left opening.
4000.CD400	T4H-C4H sill: 70-90-140-180mm. Right opening.
4000.CI400	T4H-C4H sill: 70-90-140-180mm. Left opening.
40AA.CD000	Pre-opening. Right opening.
40AA.CI000	Pre-opening. Left opening.
4052.CD000	Arms 520mm. long. Right opening.
4052.CI000	Arms 520mm. long. Left opening.

CSL Category
Cabin locking device assembly

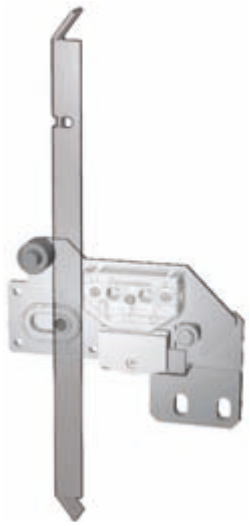

4000.CC200	Cabin locking device assembly. C2H mechanical model.
4000.CD200	Cabin locking device assembly. T2H mechanical model right opening.
4000.CI200	Cabin locking device assembly. T2H mechanical model left opening.

CLA Category
Release cam assembly

ECAE.RC000	Cabin release cam. For central doors with automatic door outside.
ECSE.RC000	Cabin release cam. For central doors with semiautomatic door outside.
ECAE.RD000	Cabin release cam. For telescopic doors, right opening, with automatic door outside.
ECSE.RD000	Cabin release cam. For telescopic doors, right opening, with semiautomatic door outside.
ECAE.RI000	Cabin release cam. For telescopic doors, left opening, with automatic door outside.
ECSE.RI000	Cabin release cam. For telescopic doors, left opening, with semiautomatic door outside.

BOC Category
Belt

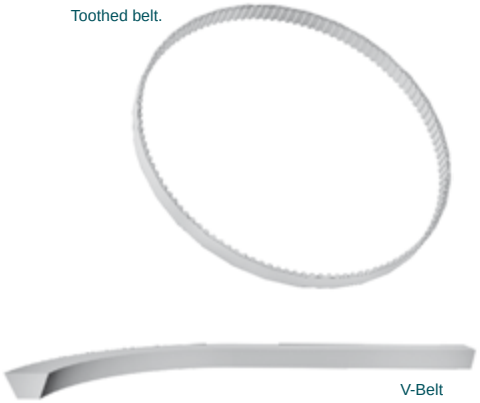

TR00.C0000	0900	V-Belt. Length 900mm.
TR00.C0000	0930	V-Belt. Length 930mm.
DT50.C0000	0450	Toothed belt. Width 50mm.
DT75.C0000	0450	Toothed belt. Width 75mm.

Category **PFR**

Roller

0100.00000	Concentric upper. 40/10 model. Ø 48mm.
0300.00000	Eccentric lower. 40/10 model. Ø 48mm.
0200.00000	Eccentric lower. 40/10 model. T3H sill: 90mm. Ø 48mm.
0800.00000	Sync. 40/10 model Ø 47mm. Inside Ø 6mm.
0900.00000	Sync. 40/10 model Ø 47mm. Inside Ø 8mm.
1000.00000	Sync. 40/10 model. T3H Ø 42mm.
5000.00000	Sync. Spare part. Ø 50mm.
6000.00000	Sync. Spare Part. Ø 60mm.

Eccentric roller.

Concentric roller.

Sync roller.

Category **PTF**

End stroke stop

0000.C0000	End stroke stop.

Category **CAM**

Cable fastener assembly

00AL.00000	Aluminium cable fastener assembly.

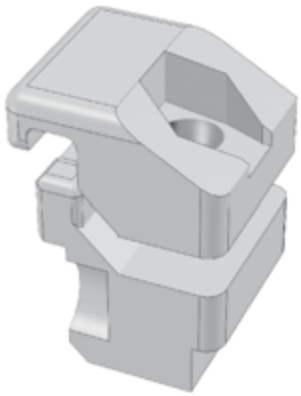

KCE Category

Electrical contact assembly

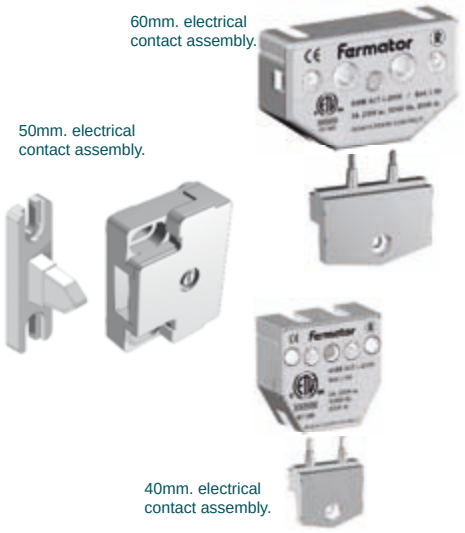

6000.00000	Electrical contact assembly. 60mm.
5000.00000	Electrical contact assembly. 50mm.
4000.00000	Electrical contact assembly. 40mm.
IP67.C0000	Electrical contact assembly. IP-67.

PLP Category

Skate drive cam

4000.CC200	C2H.
40 See Annexe 10 .CD200	T2H Right opening.
40 See Annexe 10 .CI200	T2H Left opening and C4H.
4000.CD300	T3H right opening. Except CO: 1000-1200mm.
4000.CI300	T3H left opening. Except CO: 1000-1200mm.
40E0.CD300	T3H right opening CO: 1000-1200mm.
40E0.CI300	T3H left opening CO: 1000-1200mm.
4090.CD300	T3H right opening. Sill: 90mm. Except CO: 600mm. and CO: 1000-1200mm.
4090.CI300	T3H left opening. Sill: 90mm. Except CO: 600mm. and CO: 1000-1200mm.
409E.CD300	T3H right opening. Sill: 90mm. CO: 600mm. and CO: 1000-1200mm.
409E.CI300	T3H left opening. Sill: 90mm. CO: 600mm. and CO: 1000-1200mm.
4000.CD400	T4H right opening.
4000.CI400	T4H left opening.

fax.: +34 977 771 615 | e-mail: comercial@fermator.com | www.fermator.com

Sill

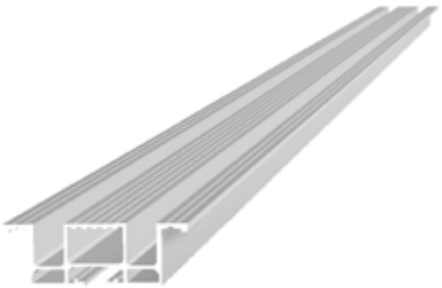

C2H

54AE.CC2	See Annexe 3	See Annexe 1	Width 54mm. Automatic door outside.
54SE.CC2	See Annexe 3	See Annexe 1	Width 54mm. Semiautomatic door outside.

C4H

70AE.CC4	See Annexe 3	See Annexe 1	Width 70mm. Automatic door outside.
70SE.CC4	See Annexe 3	See Annexe 1	Width 70mm. Semiautomatic door outside.
75AE.CC4	See Annexe 3	See Annexe 1	Width 75mm. Automatic door outside.
75SE.CC4	See Annexe 3	See Annexe 1	Width 75mm. Semiautomatic door outside.
80AE.CC4	See Annexe 3	See Annexe 1	Width 80mm. (30 + 50). Automatic door outside.
80SE.CC4	See Annexe 3	See Annexe 1	Width 80mm. (30 + 50). Semiautomatic door outside.
90AE.CC4	See Annexe 3	See Annexe 1	Width 90mm. (40 + 40). Automatic door outside.
90SE.CC4	See Annexe 3	See Annexe 1	Width 90mm. (40 + 40). Semiautomatic door outside.
9SAE.CC4	See Annexe 3	See Annexe 1	Width 90mm. (30 + 50). Automatic door outside.
9ESE.CC4	See Annexe 3	See Annexe 1	Width 90mm. (30 + 50). Semiautomatic door outside.

C6H

70AE.CC6	See Annexe 3	See Annexe 1	Width 70mm. Automatic door outside.
70SE.CC6	See Annexe 3	See Annexe 1	Width 70mm. Semiautomatic door outside.
90AE.CC6	See Annexe 3	See Annexe 1	Width 90mm. Automatic door outside.
90SE.CC6	See Annexe 3	See Annexe 1	Width 90mm. Semiautomatic door outside.
11AE.CC6	See Annexe 3	See Annexe 1	Width 115mm. Automatic door outside.
11SE.CC6	See Annexe 3	See Annexe 1	Width 115mm. Semiautomatic door outside.
13AE.CC6	See Annexe 3	See Annexe 1	Width 135mm. Automatic door outside.
13SE.CC6	See Annexe 3	See Annexe 1	Width 135mm. Semiautomatic door outside.

C8H

14AE.CC8	See Annexe 3	See Annexe 1	Width 140mm. Automatic door outside.
14SE.CC8	See Annexe 3	See Annexe 1	Width 140mm. Semiautomatic door outside.
18AE.CC8	See Annexe 3	See Annexe 1	Width 180mm. Automatic door outside.
18SE.CC8	See Annexe 3	See Annexe 1	Width 180mm. Semiautomatic door outside.

Attention: To complete this code, see Annexe 1 (Clear Opening) and Annexe 3 (Sill material)
The related price is valid for Aluminium sill CO: 800mm.

... it follows on page 36.

PPS Category

Sill

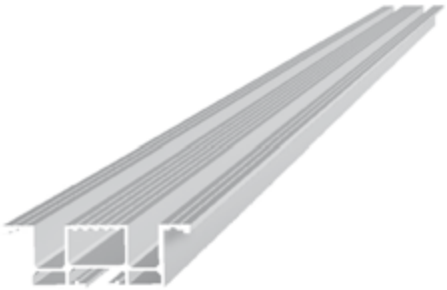

T1H

54AE.CT1	See Annexe 3	See Annexe 1	Width 54mm. Automatic door outside.
54SE.CD1	See Annexe 3	See Annexe 1	Width 54mm. Right opening. Semiautomatic door outside.
54SE.CI1	See Annexe 3	See Annexe 1	Width 54mm. Left opening. Semiautomatic door outside.

T2H

70AE.CT2	See Annexe 3	See Annexe 1	Width 70mm. Automatic door outside.
70SE.CD2	See Annexe 3	See Annexe 1	Width 70mm. Right opening. Semiautomatic door outside.
70SE.CI2	See Annexe 3	See Annexe 1	Width 70mm. Left opening. Semiautomatic door outside.
75AE.CT2	See Annexe 3	See Annexe 1	Width 75mm. Automatic door outside.
75SE.CD2	See Annexe 3	See Annexe 1	Width 75mm. Right opening. Semiautomatic door outside.
75SE.CI2	See Annexe 3	See Annexe 1	Width 75mm. Left opening. Semiautomatic door outside.
80AE.CT2	See Annexe 3	See Annexe 1	Width 80mm. (30 + 50). Automatic door outside.
80SE.CD2	See Annexe 3	See Annexe 1	Width 80mm. (30 + 50) Right op. Semiautomatic door outside.
80SE.CI2	See Annexe 3	See Annexe 1	Width 80mm. (30 + 50) Left op. Semiautomatic door outside.
90AE.CT2	See Annexe 3	See Annexe 1	Width 90mm. (40 + 40). Automatic door outside.
90SE.CD2	See Annexe 3	See Annexe 1	Width 90mm. (40 + 40) Right op. Semiautomatic door outside.
90SE.CI2	See Annexe 3	See Annexe 1	Width 90mm. (40 + 40) Left op. Semiautomatic door outside.
9SSE.CD2	See Annexe 3	See Annexe 1	Overlaid. Right opening. Semiautomatic door outside.
9SSE.CI2	See Annexe 3	See Annexe 1	Overlaid. Left opening. Semiautomatic door outside.
9ESE.CD2	See Annexe 3	See Annexe 1	Width 90mm. (30 + 50). Right op. Semiautomatic door outside.
9ESE.CI2	See Annexe 3	See Annexe 1	Width 90mm. (30 + 50). Left op. Semiautomatic door outside.

Attention: To complete this code, see Annexe 1 (Clear Opening) and Annexe 3 (Sill material)
The related price is valid for Aluminium sill CO: 800mm.

... it follows on page 37. →

fax.: +34 977 771 615 | e-mail: comercial@fermator.com | www.fermator.com

Sill

T3H

70AE.CT3	See Annexe 3	See Annexe 1	Width 70mm. Automatic door outside.
70SE.CD3	See Annexe 3	See Annexe 1	Width 70mm. Right opening. Semiautomatic door outside.
70SE.CI3	See Annexe 3	See Annexe 1	Width 70mm. Left opening. Semiautomatic door outside.
90AE.CT3	See Annexe 3	See Annexe 1	Width 90mm. Automatic door outside.
90SE.CD3	See Annexe 3	See Annexe 1	Width 90mm. Right opening. Semiautomatic door outside.
90SE.CI3	See Annexe 3	See Annexe 1	Width 90mm. Left opening. Semiautomatic door outside.
11AE.CT3	See Annexe 3	See Annexe 1	Width 115mm. Automatic door outside.
11SE.CD3	See Annexe 3	See Annexe 1	Width 115mm. Right opening. Semiautomatic door outside.
11SE.CI3	See Annexe 3	See Annexe 1	Width 115mm. Left opening. Semiautomatic door outside.
13AE.CT3	See Annexe 3	See Annexe 1	Width 135mm. Automatic door outside.
13SE.CD3	See Annexe 3	See Annexe 1	Width 135mm. Right opening. Semiautomatic door outside.
13SE.CI3	See Annexe 3	See Annexe 1	Width 135mm. Left opening. Semiautomatic door outside.

T4H

14AE.CT4	See Annexe 3	See Annexe 1	Width 140mm. Automatic door outside.
14SE.CD4	See Annexe 3	See Annexe 1	Width 140mm. Right opening. Semiautomatic door outside.
14SE.CI4	See Annexe 3	See Annexe 1	Width 140mm. Left opening. Semiautomatic door outside.
18AE.CT4	See Annexe 3	See Annexe 1	Width 180mm. Automatic door outside.
18SE.CD4	See Annexe 3	See Annexe 1	Width 180mm. Right opening. Semiautomatic door outside.
18SE.CI4	See Annexe 3	See Annexe 1	Width 180mm. Left opening. Semiautomatic door outside.

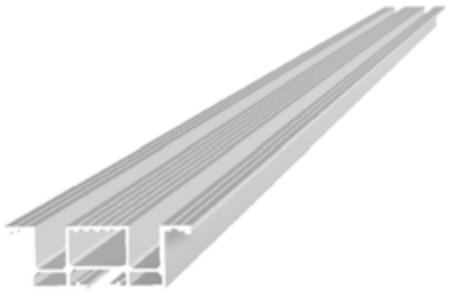

! Attention: To complete this code, see Annexe 1 (Clear Opening) and Annexe 3 (Sill material)
The related price is valid for Aluminium sill CO: 800mm.

CSZ Category

Retainer clamp assembly

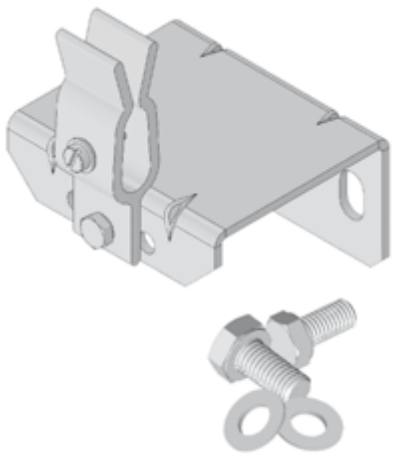

4000.CC000	Central doors.
4000.CT000	Telescopic doors.

PSZ Category

Retainer clamp

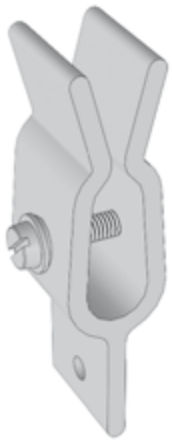

4000.C0000	Retainer clamp.

PVZ Category

Retainer rod

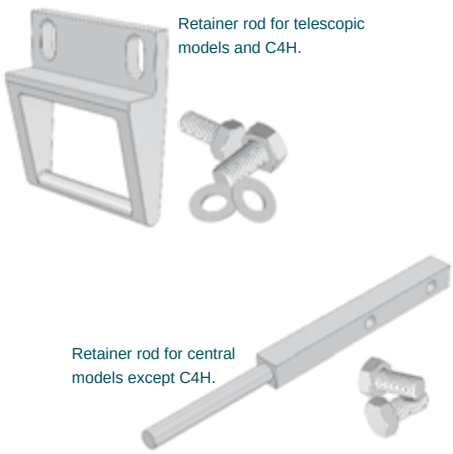

40VR.CC000	C2 and C4 doors.
40VR.CT000	Telescópic and central doors except C2 and C4.

fax.: +34 977 771 615 | e-mail: comercial@fermator.com | www.fermator.com

Category **COE**

Capacitor

CD8U.00000	Capacitor 8µF 450V.

Category **DPO**

Microswitch operator pulley cam

40AM.C0000	Microswitch operator pulley cam.

Category **CRP**

Clear opening regulator assembly

4000.C0000	Clear opening regulator assembly.

Category
PTB
Pulley arm stop

4000.C0000	Pulley arm stop. M-8

Category
PCE
Microswitch electrical contact

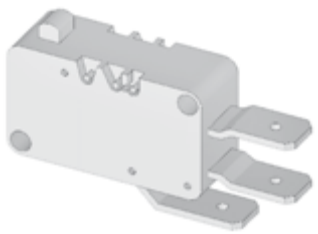

MF00.00000	Microswitch electrical contact.

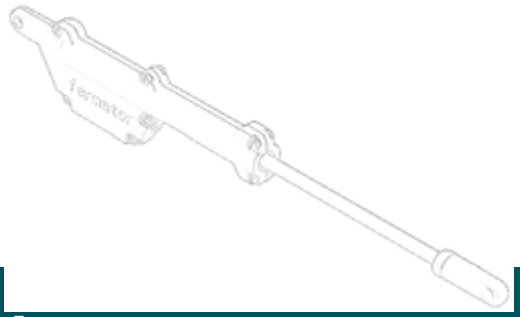

1.3

Cabin

Folding model

Category **PMT**

Motor

1200.P0000	DC 12V motor.
2400.P0000	DC 24V motor.
4800.P0000	DC 48V motor.
M200.P0000	Monophase AC 125V motor.
M500.P0000	Monophase AC 230V motor
T100.P0000	Triphase AC 125V motor.
T200.P0000	Triphase AC 230V motor.
M5IP.P0000	Monophase AC 230V IP-54 motor.
EC00.P0000	24V ECC model motor.

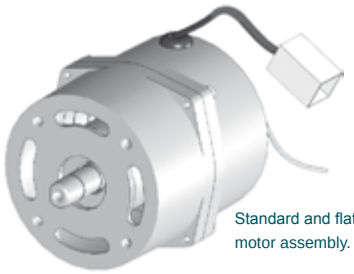

Standard and flat model motor assembly.

ECC model motor assembly.

PPM Category

Motor pulley

ON20.P0000	Ø 20mm. motor pulley.
ON35.P0000	Ø 35mm. motor pulley.
ON43.P0000	Ø 43mm. motor pulley.

PPO Category

Pulley

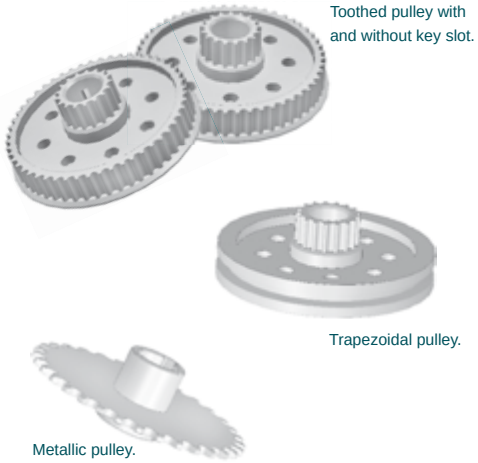

ONDC.P0000	Toothed pulley with key slot.
ONDS.P0000	Toothed pulley without key slot.
ONTR.P0000	Trapezoidal pulley.
ONMT.P0000	Metallic pulley Z32.

CBA Category

Drive arm assembly

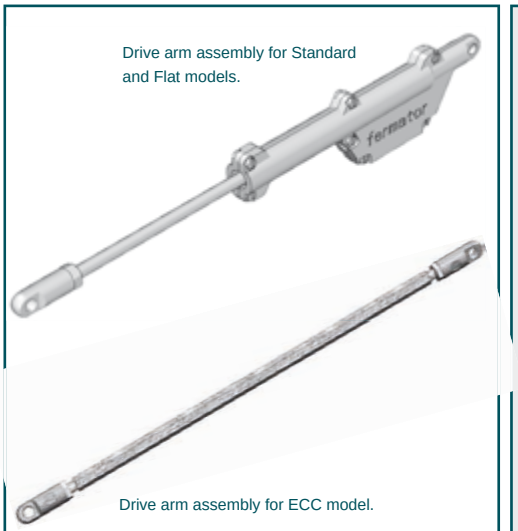

ONSC.P0000	See Annexe 1	Standard operator. Without circuit.
ONCC.P0000	See Annexe 1	Standard operator. With circuit.
OPSC.P0000	See Annexe 1	Flat operator. Without circuit.
OPCC.P0000	See Annexe 1	Flat operator. With circuit.
EC00.P0000	See Annexe 1	ECC operator.

Attention: To complete this code, see Annexe 1 (Entrance).
The related price is valid for CO: 800mm.

fax.: +34 977 771 615 | e-mail: comercial@fermator.com | www.fermator.com

Category **KCE**

Electrical contact assembly

6000.00000	Electrical contact assembly. 60mm.
5000.00000	Electrical contact assembly. 50mm.
IP54.00000	Electrical contact assembly. IP-54.
4000.00000	Electrical contact assembly. 40mm.
IP67.C0000	Electrical contact assembly. IP-67.

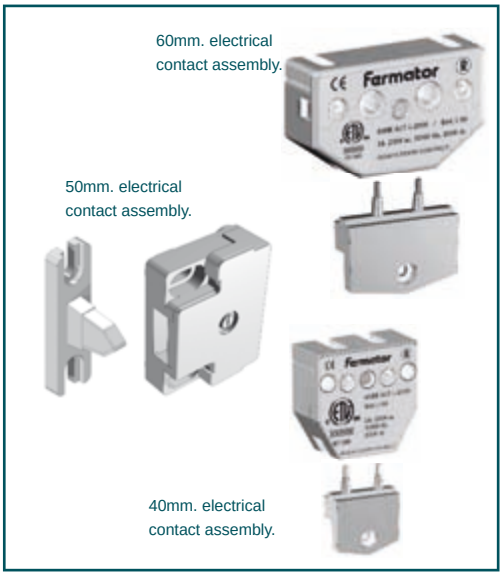

Category **BOC**

Belt

HT5M.P0000	0450	Toothed belt.
TR00.P0000	0735	V-belt. Lenght: 735mm.

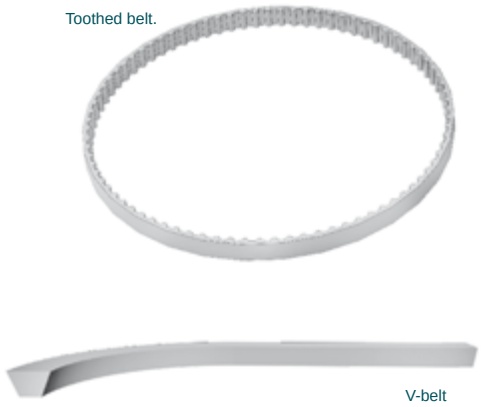

Category **SRU**

Ball-joint

0000.P0000	Ball-joint assembly.

PCQ Category Bushing

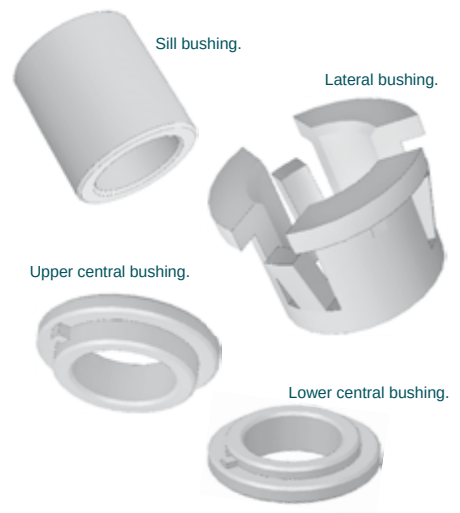

00CL.P0000	Lateral.
ONCS.P0000	Upper central.
ONCI.P0000	Lower central.
ONCP.P0000	Sill.

PPS Category Sill

ONIE.P00	See Annexe 3	See Annexe 1	Lower flush. Standard operator.
ONIS.P00	See Annexe 3	See Annexe 1	Lower overlaid. Standard operator.
OPSE.P00	See Annexe 3	See Annexe 1	Upper flush. Standard operator.
OPIE.P00	See Annexe 3	See Annexe 1	Lower flush. Flat operator.
OPSE.P00	See Annexe 3	See Annexe 1	Upper flush. Flat operator.

Attention: To complete this code, see Annexe 1 (Clear Opening) and Annexe 3 (Material).
The related price is valid for aluminium sill CO: 800mm.

PAP Category Sill support

ONAP.P0000	See Annexe 1	Standard operator.
ONSP.P0000	See Annexe 1	Flat operator.
ONRP.P0000	See Annexe 1	Sill reinforcement.

Attention: To complete this code, see Annexe 1 (Clear Opening).
The related price is valid for CO: 800mm.

fax.: +34 977 771 615 | e-mail: comercial@fermator.com | www.fermator.com

Electrical Wiring

ONGC.P0000	0680	General with circuit. Length 680mm. Entrance 700mm or smaller.
ONGC.P0000	0730	General with circuit. Length 680mm. Entrance 730mm. to 800mm.
ONGC.P0000	0780	General with circuit. Length 780mm. Entrance 850 to 900mm.
ONGC.P0000	0930	General with circuit. Length 930mm. Entrance 950 to 1200mm.
ONGS.P0000	0620	General without circuit. Length 620mm. Entrance 700mm. or smaller.
ONGS.P0000	0670	General without circuit. Length 670mm. Entrance 750 to 800mm.
ONGC.P0000	0720	General with circuit. Length 720mm. Entrance 850 to 900mm.
ONG1.P0000	0720	General with circuit. Length 720mm. Entrance 950 to 1200mm.
ONRC.PD000	0925	Reopening with circuit. Right arm. Entrance 700mm. or smaller. Length 925mm.
ONRC.PD000	0975	Reopening with circuit. Right arm. Entrance 750 a 800mm. Length 975mm.
ONRC.PD000	1055	Reopening with circuit. Right arm. Entrance 850 to 900mm. Length 1055mm.
ONRC.PD000	1105	Reopening with circuit. Right arm. Entrance 950 to 1200mm. Length 1105mm.
ONRC.PI000	0460	Reopening with circuit. Left arm. Entrance 700mm. or smaller. Length 460mm.
ONRC.PI000	0490	Reopening with circuit. Left arm. Entrance 750 to 800mm. Length 490mm.
ONRC.PI000	0540	Reopening with circuit. Left arm. Entrance 850 to 900mm. Length 540mm.
ONRC.PI000	0590	Reopening with circuit. Left arm. Entrance 950 to 1200mm. Length 590mm.
ONRR.PD000	0925	Reopening with terminal strip. Right arm. Entrance 700mm. or smaller. Length 925mm.
ONRR.PD000	0975	Reopening with terminal strip. Right arm. Entrance 750 to 800mm. Length 975mm.
ONRR.PD000	1025	Reopening with terminal strip. Right arm. Entrance 850 to 900mm. Length 1025mm.
ONRR.PD000	1075	Reopening with terminal strip. Right arm. Entrance 950 to 1200mm. Length 1075mm.
ONRR.PI000	0500	Reopening with terminal strip. Left arm. Entrance 700mm. or smaller. Length 500mm.
ONRR.PI000	0550	Reopening with terminal strip. Left arm. Entrance 750 to 800mm. Length 550mm.
ONRR.PI000	0600	Reopening with terminal strip. Left arm. Entrance 850 to 900mm. Length 600mm.
ONRR.PI000	0650	Reopening with terminal strip. Left arm. Entrance 950 to 1200mm. Length 650mm.

PCE Category
Microswitch electrical contact

ECC model.

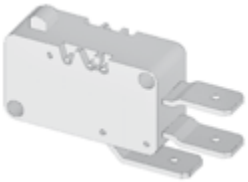
Standard and flat models.

MF00.00000	Microswitch electrical contact. Standard and Flat models.
MFEC.P0000	Microswitch electrical contact. ECC model.

EOP Category
Operator shaft

ONEC.P0000	Central shaft. Except for entrances from 500mm to 600mm.
ONES.P0000	Central shaft. For entrances from 500mm to 600mm.
ONEL.P0000	Lateral shaft.
ONBA.PD000	Right drive arm shaft.
ONBA.PI000	Left drive arm shaft.
ECPS.P0000	Clutch shaft for ECC model.

DEP Category
Microswitch operation shaft cam

ECLM.P0000	Microswitch operation shaft cam. Standar, Flat and ECC model.

Category **PBI**

Hinge

ONBP.P0000	Plastic hinge assembly. Standard model (2 units).
OPBP.P0000	Plastic hinge assembly. Flat model (2 units).
ONBA.P0000	Alcrin Model. Length: 2m.

Plastic hinge.

Alcrin hinge.

Category **DPO**

Belt guide

ONGC.P0000	Belt guide.

Category **PTA**

Handle

PPTH.P0000	Handle for Flat model door.

Category
CEN
Lock assembly

EC00.P0000	Lock assembly for ECC doors.

Category
CBA
Clutch assembly

EC00.P0000	Clutch assembly for ECC doors.

Category
CLA
Cam

EC00.P0000	Cam for ECC doors with lock assembly.

Category **COE**

Capacitor

CD6U.00000	6'5µF 450V.

Category **AGH**

Folding door model panel guide shoe assembly

0000.P0000	Folding door model panel guide shoe assembly (4 units).

1.4

Cabin

Cabin accessories

Category **CLA**

Drive cam assembly

RF00.CD000	Right frontal retractable cam.
RF00.CI000	Left frontal retractable cam.
RI00.C0000	Inverted retractable cam.
RL00.C0000	Retractable cam.
RL00.PD000	Folding door lateral retractable cam.
RF00.PD000	Right folding door frontal retractable cam.
RF00.PI000	Left folding door frontal retractable cam.
RLEC.PD000	ECC folding door lateral retractable cam.
RFEC.PD000	ECC right folding door frontal retractable cam.
RFEC.PI000	ECC left folding door frontal retractable cam.

CLA Category — Drive cam assembly

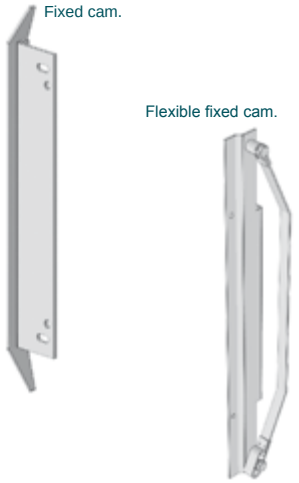

LF00.C0000	Fixed cam.
LX00.CD000	Right flexible fixed cam.
LX00.CI000	Left flexible fixed cam.

PFA Category — Toe guard mechanic and VVVF models

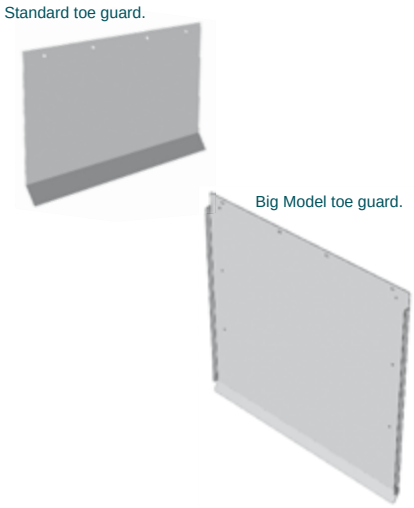

0000.C00FG	See Annexe 1	Standard toe guard. Galvanized steel.
0000.C00XN	See Annexe 1	Standard toe guard. Stainless steel.
GM00.C00IM	See Annexe 1	Big Model toe guard. Epoxy.
GM00.C00XN	See Annexe 1	Big Model toe guard. Stainless steel.

Attention: To complete this code, see Annexe 1 (Clear Opening).
The related price is valid for CO: 800mm.

PFA Category — Retractable toe guard

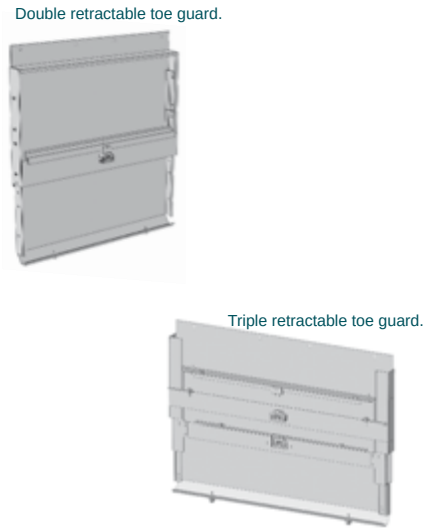

RD00.C0000	See Annexe 1	Double retractable toe guard.
RT00.C0000	See Annexe 1	Triple retractable toe guard.

Attention: To complete this code, see Annexe 1 (Clear Opening).
The related price is valid for CO: 800mm.

Category **PFA**

Folding toe guard

0000.P00FG	See Annexe 1	Standard toe guard. Folding door. Galvanized steel.
0000.P00XN	See Annexe 1	Standard toe guard. Folding door. Stainless steel.
GMCA.P00IM	See Annexe 1	Big Model toe guard with support. Standard folding door.
GMSA.P00XN	See Annexe 1	Big Model toe guard without support. Standard folding door.
OPGA.P00IM	See Annexe 1	Big Model toe guard with support. Flat folding door.

Attention: To complete this code, see Annexe 1 (Clear Opening).
The related price is valid for CO: 800mm.

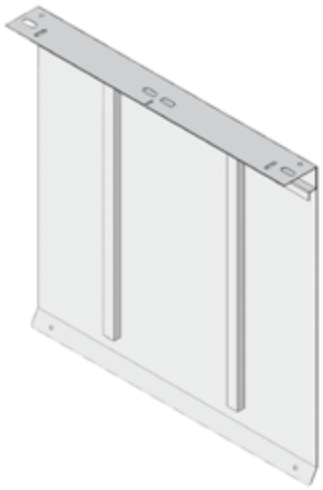

Category **GFH**

Glass

MR00.C0000	0514	0114	Cabin door vision glass. Sanded edges.
GMHD.C0000	X dimension	Y dimension	Laminated Glass. Big vision. Right opening panel.
GMHI.C0000	X dimension	Y dimension	Laminated Glass. Big vision. Left opening panel.

Emergency power supply SAI

X dimension code: CO / number of panels + 20
Y dimension code: CH - 120

Attention: If the value is 3 figures, it must be preceded by zeros to complete the code.

Category
VCI
Emergency power supply

AESB.C00EE	Emergency power supply without battery. Spanish-English language.
AECB.C00EE	Emergency power supply with battery. Spanish-English language.

Category
CFT
Photocell curtain

BF00.C0000	Photocell curtain.

Category **KFT**

Photocell curtain support assembly

BF00.CC000	Photocell curtain support assembly. Central doors.
BF00.CD000	Photocell curtain support assembly. Right telescopic doors.
BF00.CI000	Photocell curtain support assembly. Left telescopic doors.

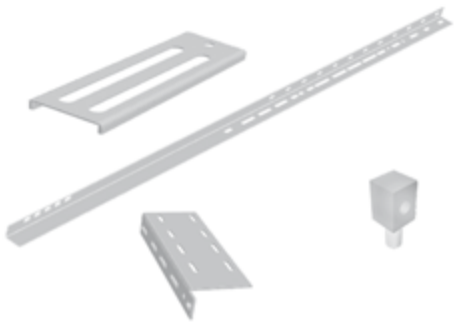

Category **VCI**

C2T electronic module

2T00.C00ES	C2T electronic module with casing. Spanish language.
2T00.C00EN	C2T electronic module with casing. English language.
2T00.C00FR	C2T electronic module with casing. French language.
2T00.C00DE	C2T electronic module with casing. German language.
2TSC.C0000	C2T electronic module without casing.
DCSC.P0000	DBC electronic module without casing. Folding doors ECC model.

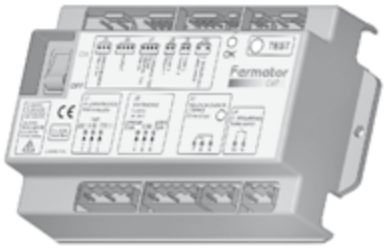

Category **COE**

Fuse

FU4A.0000	4A ceramic fuse.

Category **AGH**

VVVF & mechanical model panel guide shoe assembly

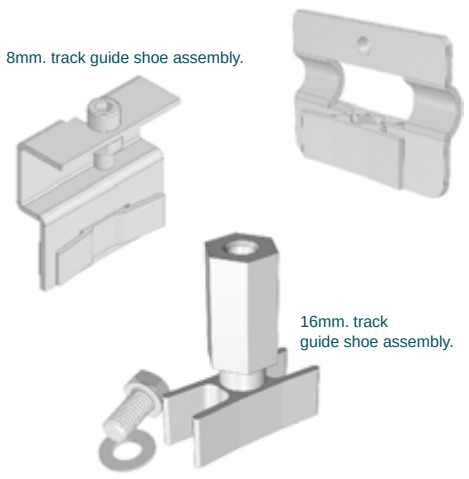

0001.C0000	Panel guide shoe assembly. 16mm. track (2 units).
0002.C0000	Panel guide shoe assembly. 8mm. track. T3H Sill: 90mm. (2 units).
0003.C0000	Panel guide shoe assembly. 8mm. track. T2H-C4H Sill: 70mm. Height: 30mm. (2 units).
0004.C0000	Panel guide shoe assembly. 8mm. track. T3H Sill: 70mm. Height: 20mm. (2 units).
0005.C0000	Panel guide shoe assembly. 16mm. track. T3H Sill: 90mm. (2 units).
0006.C0000	Panel guide shoe assembly. Full glass panel dating from before 2008 (2 units).
0007.C0000	Panel guide shoe assembly. 16mm. track. C4H Sill: 70mm. (2 units).

Category **AEC**

Operator fastening bracket set

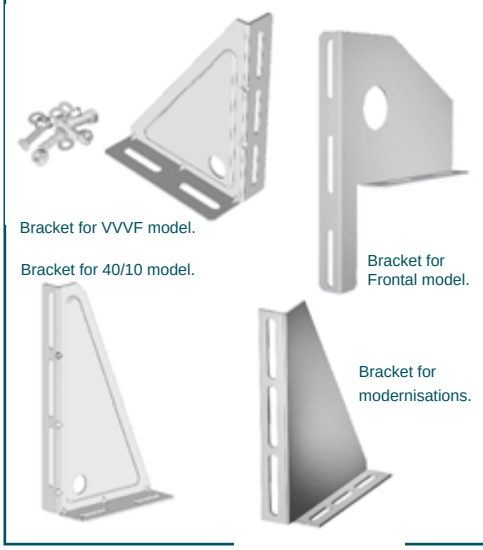

4000.C0000	Set for 40/10 operators (2 units).
VF00.C0000	Set for VVVF operators (2 units).
F000.C0000	Set for frontal operators (2 units).
MO00.C0000	Set for cabin modernisation operators (2 units).

Category **ASH**

Panel regulator support

0001.C0000	Support height 60mm. (2 units).
0002.C0000	Support height 120mm. (2 units).
0004.C0000	Support height 125mm. (2 units).
5R05.00000	Full glass panel except C4H. (2 units).
5R06.0C400	C4H full glass panel. (2 units).
0008.C0000	Support height 115mm. (2 units).
0009.C0000	Support height 165mm. (2 units).

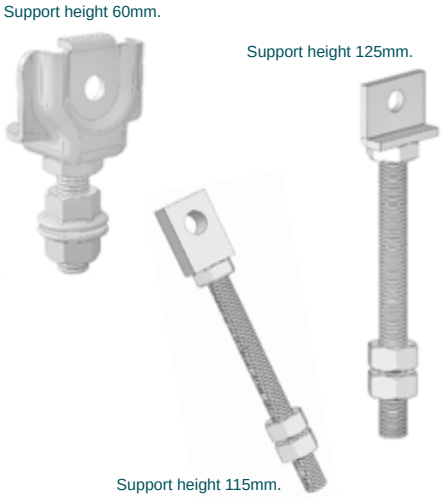

Category **PAC**

Sill support

See Annexe 11	54.CT200	See Annexe 1	For 54mm. sill.
See Annexe 11	70.CT200	See Annexe 1	For 70mm. sill.
See Annexe 11	75.CT200	See Annexe 1	For 75mm. sill.
See Annexe 11	8S.CT200	See Annexe 1	For 80mm. sill.
See Annexe 11	85.CT200	See Annexe 1	For 85mm. sill.
See Annexe 11	90.CT200	See Annexe 1	For 90mm. sill.
See Annexe 11	95.CT200	See Annexe 1	For 95mm. sill.
See Annexe 11	11.CT200	See Annexe 1	For 115mm. sill.
See Annexe 11	13.CT200	See Annexe 1	For 130mm. sill.
See Annexe 11	14.CT200	See Annexe 1	For 140mm. sill.
See Annexe 11	18.CT200	See Annexe 1	For 180mm. sill.

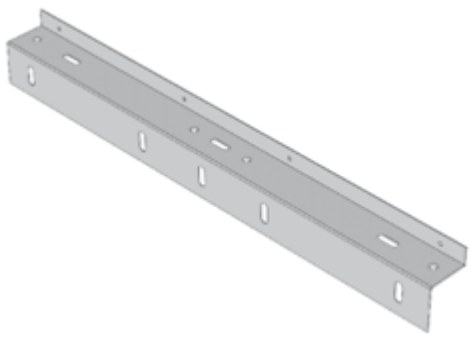

Attention: To complete this code, see Annexe 1 (Clear Opening table) and Annexe 11 (Slot table).
The related price is valid for CO: 800mm.

COE Category

Terminal strip

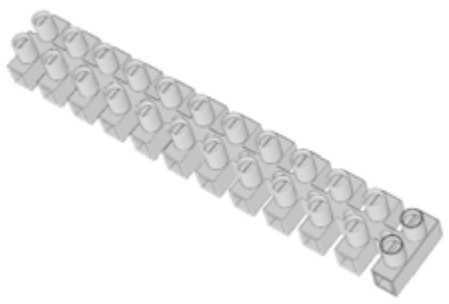

RC00.00000	Terminal strip.

PTG Category

Rubber Stop

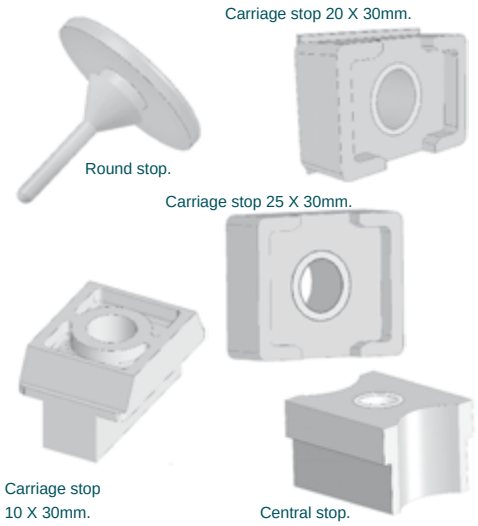

TP20.00000	Carriage stop 20 X 30mm.
TP25.C0000	Carriage stop 25 X 30mm.
TP10.CC400	Carriage stop 10 X 30mm.
TC00.00000	Central stop.
TR00.00000	Round stop.

UHT Category

HTD belt regulation tool

VF00.C0000	HTD belt regulation tool.

fax.: +34 977 771 615 | e-mail: comercial@fermator.com | www.fermator.com

Category **URP**

Lock beak regulation tool

0000.R0000	Lock beak regulation tool.

Category **PCG**

Top-track

C2H

40	See Annexe 4	.CC2ZN	See Annexe 1	40/10 model.
50	See Annexe 4	.CC2ZN	See Annexe 1	50/11 model.
400R.CC2ZN			See Annexe 1	40/10 reinforced model.
500R.CC2ZN			See Annexe 1	50/11 reinforced model.

C4H

40	See Annexe 4	.CC4ZN	See Annexe 1	40/10 model.
50	See Annexe 4	.CC4ZN	See Annexe 1	50/11 model.
40RR.CC4ZN			See Annexe 1	40/10 reinforced model.
50RR.CC4ZN			See Annexe 1	50/11 reinforced model.

C6H

40	See Annexe 4	.CC6ZN	See Annexe 1	40/10 model.
50	See Annexe 4	.CC6ZN	See Annexe 1	50/11 model.
40RR.CC6ZN			See Annexe 1	40/10 reinforced model.
50RR.CC6ZN			See Annexe 1	50/11 reinforced model.

C8H

40	See Annexe 4	.CC8ZN	See Annexe 1	40/10 model.
50	See Annexe 4	.CC8ZN	See Annexe 1	50/11 model.
40SR.CC8ZN			See Annexe 1	40/10 reinforced model.
50SR.CC8ZN			See Annexe 1	50/11 reinforced model.

Attention: To complete this code, see Annexe 1 (Clear Opening) and Annexe 4 (Top-track position).
The related price is valid for CO: 800mm.

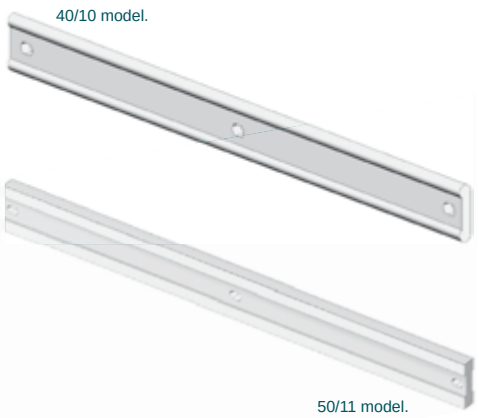

... it follows on page 60. →

PCG Category

Top-track

T1H

40	See Annexe 4	.CT1ZN	See Annexe 1	40/10 model.
50	See Annexe 4	.CT1ZN	See Annexe 1	50/11 model.
400R.CT1ZN			See Annexe 1	40/10 reinforced model.
500R.CT1ZN			See Annexe 1	50/11 reinforced model.

T2H

40	See Annexe 4	.CT2ZN	See Annexe 1	40/10 model.
50	See Annexe 4	.CT2ZN	See Annexe 1	50/11 model.
40RR.CT2ZN			See Annexe 1	40/10 reinforced model.
50RR.CT2ZN			See Annexe 1	50/11 reinforced model.

T3H

40	See Annexe 4	.CT3ZN	See Annexe 1	40/10 model.
50	See Annexe 4	.CT3ZN	See Annexe 1	50/11 model.
40RR.CT3ZN			See Annexe 1	40/10 reinforced model.
50RR.CT3ZN			See Annexe 1	50/11 reinforced model.

T4H

40	See Annexe 4	.CT4ZN	See Annexe 1	40/10 model.
50	See Annexe 4	.CT4ZN	See Annexe 1	50/11 model.
40SR.CT4ZN			See Annexe 1	40/10 reinforced model.
50SR.CT4ZN			See Annexe 1	50/11 reinforced model.

Attention: To complete this code, see Annexe 1 (Clear Opening) and Annexe 4 (Top-track position).
The related price is valid for CO: 800mm.

fax.: +34 977 771 615 | e-mail: comercial@fermator.com | www.fermator.com

Labels

VF4A.CD0EE	VVVF electronic module. Right opening. Spanish / English.
VF4A.CD0FR	VVVF electronic module. Right opening. French.
VF4A.CD0DE	VVVF electronic module. Right opening. German.
VF4A.CI0EE	VVVF electronic module. Left opening. Spanish / English.
VF4A.CI0FR	VVVF electronic module. Left opening. French.
VF4A.CI0DE	VVVF electronic module. Left opening. German.
VFCP.C00ES	Programming console. Spanish.
VFCP.C00EN	Programming console. English.
VFCP.C00FR	Programming console. French.
VFCP.C00DE	Programming console. German.
AE00.CD0EE	Emergency power suply. Right opening. Spanish / English.
AE00.CI0EE	Emergency power suply. Left opening. Spanish / English.
2T00.C00EE	C2T electronic module with casing. Spanish / English.

Fermator
AUTOMATIC DOORS FOR LIFTS

2

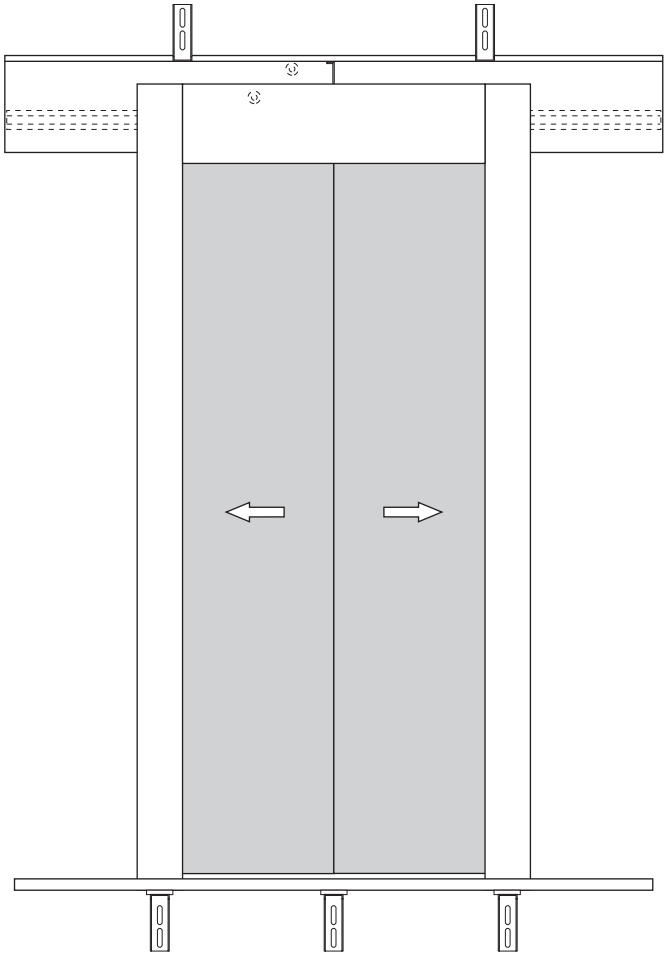

Landing

2.1 Automatic model.

2.2 Semiautomatic model.

2.1.1

Landing

Automatic model: Mechanism

Category **CPP**

Lock beak-plate assembly

40/10 MODEL

4000.RD000	Right opening.
4000.RI000	Left opening.
4000.RC400	Left opening & C4H CO: ≤ 915mm.
4000.RD400	Right opening 4 panels CO: ≤ 915mm.
4D00.RD000	Right opening. DIN 18.091.
4D00.RI000	Left opening. DIN 18.091.
4D00.RC400	Left opening & C4H CO: ≤ 915mm. DIN 18.091.
4D00.RD400	Right opening 4 panels CO: ≤ 915mm. DIN 18.091.
40IP.RD000	Right opening. IP-54.
40IP.RI000	Left opening. IP-54.
40IP.RC400	Left opening & C4H CO: ≤ 915mm. IP-54.
40IP.RD400	Right opening 4 panels CO: ≤ 915mm. IP-54.

* Attention: For central opening operators with double locking device, choose “telescopic right opening” or “telescopic left opening” according to the assembly hand needed.

... it follows on page 66. →

CPP Category

Lock beak-plate assembly

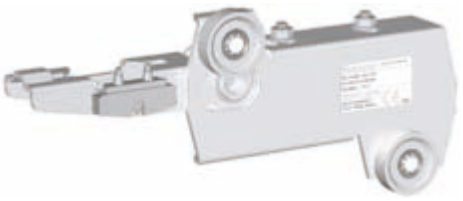

50/11 MODEL

5000.RD000	Right opening.
5000.RI000	Left opening.
5000.RC400	Left opening & C4H CO: ≤ 915mm.
5000.RD400	Right opening 4 panels CO: ≤ 915mm.
5D00.RD000	Right opening. DIN 18.091.
5D00.RI000	Left opening. DIN 18.091.
5D00.RC400	Left opening & C4H CO: ≤ 915mm. DIN 18.091.
5D00.RD400	Right opening 4 panels CO: ≤ 915mm. DIN 18.091.
50IP.RD000	Right opening. IP-54.
50IP.RI000	Left opening. IP-54.
50IP.RC400	Left opening & C4H CO: ≤ 915mm. IP-54.
50IP.RD400	Right opening 4 panels CO: ≤ 915mm. IP-54.

* Attention: For central opening operators with double locking device, choose “telescopic right opening” or “telescopic left opening” according to the assembly hand needed.

CPT Category

Rollers holder plate assembly

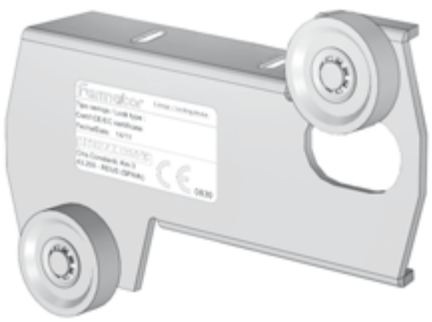

0000.RD000	Right opening.
0000.RI000	Left opening.
0000.RC400	Left opening & C4H CO: ≤ 915mm.
0000.RD400	Right opening 4 panels CO: ≤ 915mm.

* Attention: For central opening operators with double locking device, choose “telescopic right opening” or “telescopic left opening” according to the assembly hand needed.

Category **CPE**

Lock beak assembly

4000.RD000	40/10 model. Right opening.
4000.RI000	40/10 model. Left opening.
40IP.RD000	40/10 model. Right opening. IP-54.
40IP.RI000	40/10 model. Left opening. IP-54.
5000.RD000	50/11 model. Right opening.
5000.RI000	50/11 model. Left opening.
50IP.RD000	50/11 model. Right opening. IP-54.
50IP.RI000	50/11 model. Left opening. IP-54.

40/10 model.

50/11 model.

* Attention: For central opening operators with double locking device, choose “telescopic right opening” or “telescopic left opening” according to the assembly hand needed.

Category **PSP**

Lock beak support

4000.RC200	40/10 model. C2H.
4000.R0000	40/10 model. Except for C2H, C4H, T1H, T3H y T4H, included in other references of this price list.
4000.RD400	40/10 model. Right opening T4H. CO: 600mm.
4000.RI400	40/10 model. Left opening T4H & C4H. CO: 600mm.
40ES.RD300	40/10 model. Right opening T3H & T4H. CO: 650mm.
40ES.RI300	40/10 model. Left opening T3H & T4H CO: 650. C4H CO: 650-915mm.

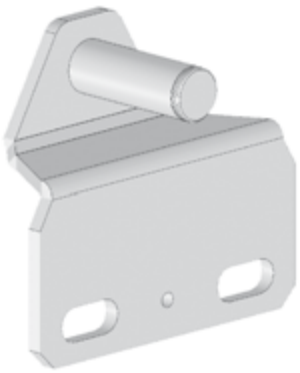

Category

PSP

Lock beak support

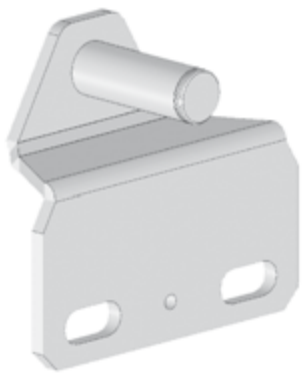

4000.RT100	40/10 model. T1H.
5000.RC200	50/11 model. C2H.
5000.R0000	50/11 model. Except for C2H, C4H, T1H, T3H & T4H, included in others references of price list.
50ES.RD000	50/11 model. Right opening T2H & T3H. CO: ≤ 900mm.
50ES.RI000	50/11 model. Left opening T2H, T3H & C4H CO: ≤ 900mm.

Category

CSC

Lock contact support assembly

4000.RD000	40/10 model. Right opening.
4000.RI000	40/10 model. Left opening.
40DE.RC000	40/10 model. Central opening double lock.
5000.RD000	50/11 model. Right opening.
5000.RI000	50/11 model. Left opening.
50DE.RC000	50/11 model. Central opening double lock.
40IP.RD000	40/10 model. Right opening. IP-54.
40IP.RI000	40/10 model. Left opening. IP-54.
40DI.RC000	40/10 model. Central opening double lock. IP-54.
50IP.RD000	50/11 model. Right opening. IP-54.
50IP.RI000	50/11 model. Left opening. IP-54.
50DI.RC000	50/11 model. Central opening double lock. IP-54

* Attention: For central opening operators with double locking device, choose “telescopic right opening” or “telescopic left opening” according to the assembly hand needed.

fax.: +34 977 771 615 | e-mail: comercial@fermator.com | www.fermator.com

Category **KCE**

Electrical contact assembly

6040.00000	Electrical contact assembly. 40/10 model. 60mm.
6050.00000	Electrical contact assembly. 50/11 model. 60mm.
4000.00000	Electrical contact assembly. 40mm.
5000.00000	Electrical contact assembly. 50mm.
IP54.00000	Electrical contact assembly. IP-54.
IP67.00000	Electrical contact assembly. IP-67.

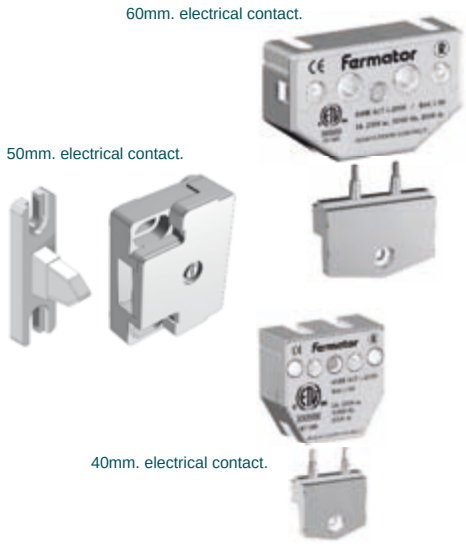

Category **PFR**

Roller

0100.00000	Concentric upper. 40/10 model. PFR-01. Ø 48mm.
0500.00000	Concentric upper. 50/11 model. PFR-05. Ø 56mm.
0400.00000	Reinforced eccentric lower 40/10 model. PFR-04. Ø 30mm.
1500.00000	Eccentric lower 40/10 model. PFR-15. Ø 30mm.
0600.00000	Eccentric lower 50/11 model. PFR-06. Ø 54mm.
0800.00000	Sync. 40/10 model. PFR-08. Ø 47mm.
0700.00000	Sync. 50/11 model. PFR-07. Ø 64mm.

Category **RSR**

Safety spring

0000.R0000	0354	Safety spring. Length = 354mm.
0000.R0000	0374	Safety spring. Length = 374mm.
0000.R0000	0392	Safety spring. Length = 392mm.
0000.R0000	0424	Safety spring. Length = 424mm.
0000.R0000	0442	Safety spring. Length = 442mm.
0000.R0000	0474	Safety spring. Length = 474mm.
0000.R0000	0560	Safety spring. Length = 560mm.

Attention: For asociate spring length with CO & door model see Annexe 5.

Category
PCA
Syncronisation cable

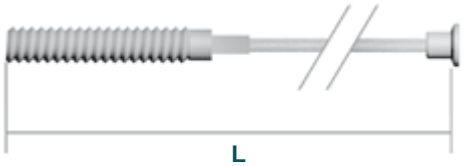

0000.	See Annexe 2	Sync cable.

Attention: To complete this code, see Annexe 2 (Sync cable length).
The related price is valid one linear metre.

Category
CAM
Cable fastener assembly

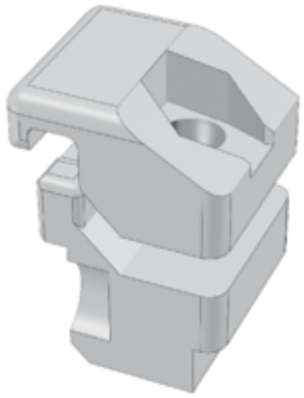

AL00.00000	Aluminium cable fastener assembly.

Category
DSR
Safety spring fastening support

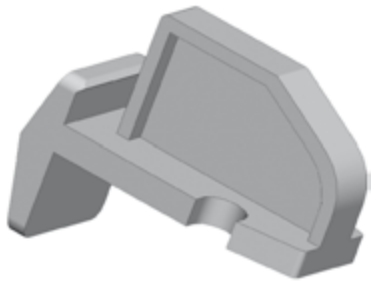

0000.R0000	Safety spring fastening support.

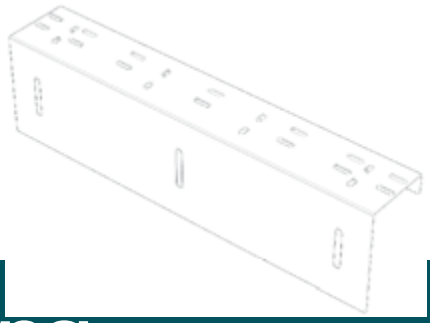

2.1.2

Landing

Automatic model: Frame

Category **PCF**

Sill support console

0050.R0000	See Annexe 1	Width: 50mm.
0080.R0000	See Annexe 1	Width: 80mm.
0013.R0000	See Annexe 1	Width: 130mm.
0017.R0000	See Annexe 1	Width: 175mm.
0019.R0000	See Annexe 1	Width: 190mm.

Attention: To complete this code, see Annexe 1 (Clear Opening).
The related price is valid for CO: 800mm.

Category **PFA**

Toe guard

0000.R00FG	See Annexe 1	Standard model. Galvanized steel.
0000.R00XN	See Annexe 1	Standard model. Stainless steel.
A600.R00FG	See Annexe 1	A-60 model. Galvanized steel.
A600.R00XN	See Annexe 1	A-60 model. Stainless steel.

Attention: To complete this code, see Annexe 1 (Clear Opening).
The related price is valid for CO: 800mm.

PPS

Category

Sill

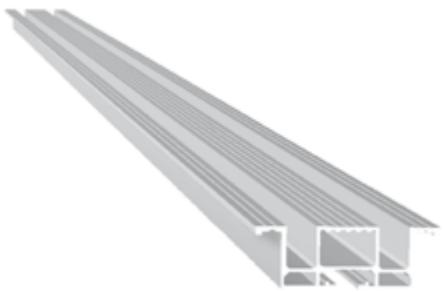

54AE.RC2	See Annexe 3	See Annexe 1	C2H. Width: 54mm.
75AE.RC4	See Annexe 3	See Annexe 1	C4H. Width: 75mm.
90AE.RC4	See Annexe 3	See Annexe 1	C4H. Width: 90mm. (40 + 40).
13AE.RC6	See Annexe 3	See Annexe 1	C6H. Width: 135mm.
18AE.RC8	See Annexe 3	See Annexe 1	C8H. Width: 180mm.
54AE.RT1	See Annexe 3	See Annexe 1	T1H. Width: 54mm.
75AE.RT2	See Annexe 3	See Annexe 1	T2H. Width: 75mm.
90AE.RT2	See Annexe 3	See Annexe 1	T2H. AnchoWidth:
13AE.RT3	See Annexe 3	See Annexe 1	T3H. Width: 135mm.
18AE.RT4	See Annexe 3	See Annexe 1	T4H. Width: 180mm.

Attention: To complete this code, see Annexe 1 (Clear Opening) and Annexe 3 (Sill material). The related price is valid for Aluminium sill CO: 800mm.

PSS

Category

Sill suplement

6000.R00	See Annexe 3	See Annexe 1	Width: 60mm.
7000.R00	See Annexe 3	See Annexe 1	Width: 70mm.

Attention: To complete this code, see Annexe 1 (Clear Opening) and Annexe 3 (Sill material). The related price is valid for Aluminium sill CO: 800mm.

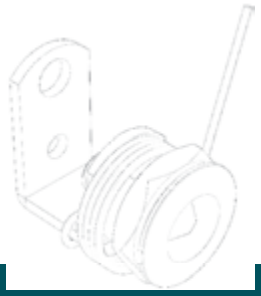

2.1.3

Landing

Automatic model: Accessories

Category **AES**

Frame fastening bracket set

A005.R0000	”A” type brackets (5 units).
D005.R0000	”D” type brackets (5 units).
E005.R0000	”E” type brackets (5 units).
F005.R0000	”F” type brackets (5 units).
G005.R0000	”G” type brackets (5 units).
H005.R0000	”H” type brackets (5 units).
Q005.R0000	”Q” type brackets (5 units).
R005.R0000	”R” type brackets (5 units).
S005.R0000	”S” type brackets (5 units).
U005.R0000	”U” type brackets (5 units).
V205.R0000	”V2” type brackets (5 units).
V705.R0000	”V7” type brackets (5 units).
V805.R0000	”V8” type brackets (5 units).
CR00.R0000	Reinforced mechanism brackets (2 units).
N000.R0000	”N” type brackets (2 units “F” model; 2 units “G” model & 2 units “M” model).
O000.R0000	”O” type brackets (2 units “M” model; 2 units “H” model & 2 units “E” model).

Category
ASF
Jamb fixing support accessory set

0000.RC000	Jamb fixing support accessory set. Central opening.
0000.RD000	Jamb fixing support accessory set. Right telescopic opening.
0000.RI000	Jamb fixing support accessory set. Left telescopic opening.

Category
ACJ
Release lock accessory assembly

0000.RD000	Right opening telescopic & C2H.
0000.RI000	Left opening telescopic & C4H-C6H-C8H.

Category
ADS
Triangular key accessory set

0000.R0000	Triangular key accessory set.

Category **UTM**

Modernisation installing tool

MD00.R0000	**2000**	**See Annexe 1**	Modernisation installing tool.

Attention: To complete this code, see Annexe 1 (Clear Opening).
The related price is valid for CO: 800mm.

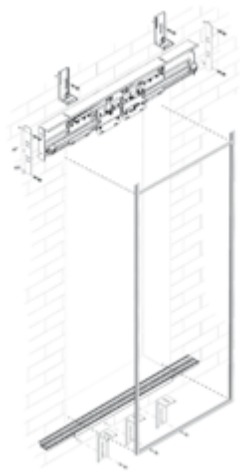

Category **PTG**

Rubber stop

TP20.00000	20 X 30mm. stop.
TP25.00000	25 X 30mm. stop.
TR00.00000	Round stop.

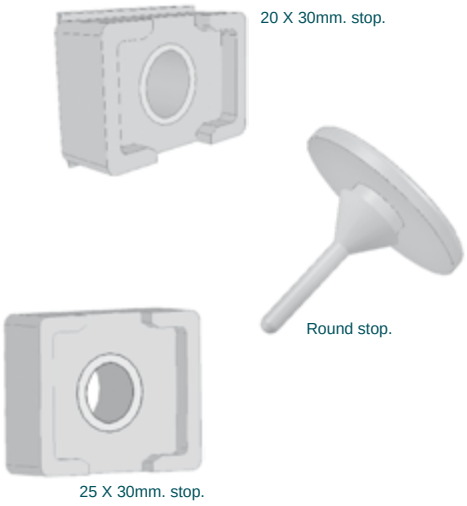

Category **ACH**

Panel accessories set

0000.R0000	Panel regulation support & panel guide shoe set (2 units).

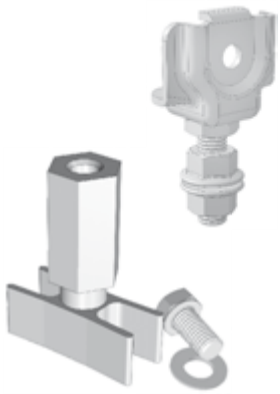

Category
ASH
Panel regulator support accessories set

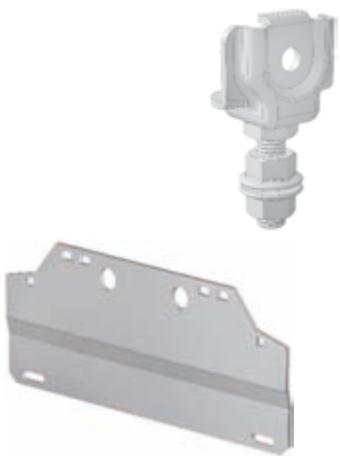

5R05.00000	Panel regulator support accessories set for full glass panel except C4H (2 units).
5R06.0C400	Panel regulator support accessories set for full glass panel C4H (2 units).

Category
AGH
Panel guide shoe accessories set

0006.00000	Panel guide shoe accessories set for full glass panels (2 units).

Category
APT
Pulling roller accessories set

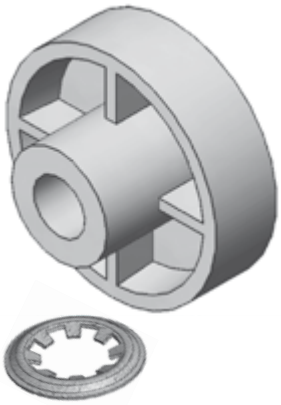

0000.R0000	Pulling rollers accessories set. Except C4H ≤ 915mm.
00ES.RC400	Pulling rollers accessories set. For C4H ≤ 915mm.

Top-track

C2H

40	See Annexe 4	.RC2ZN	See Annexe 1	40/10 model.
50	See Annexe 4	.RC2ZN	See Annexe 1	50/11 model.
400R.RC2ZN			See Annexe 1	Reinforced 40/10 model.
500R.RC2ZN			See Annexe 1	Reinforced 50/11 model.

C4H

40	See Annexe 4	.RC4ZN	See Annexe 1	40/10 model.
50	See Annexe 4	.RC4ZN	See Annexe 1	50/11 model.
40RR.RC4ZN			See Annexe 1	Reinforced 40/10 model.
50RR.RC4ZN			See Annexe 1	Reinforced 50/11 model.

C6H

40	See Annexe 4	.RC6ZN	See Annexe 1	40/10 model.
50	See Annexe 4	.RC6ZN	See Annexe 1	50/11 model.
40RR.RC6ZN			See Annexe 1	Reinforced 40/10 model.
50RR.RC6ZN			See Annexe 1	Reinforced 50/11 model.

C8H

40	See Annexe 4	.RC8ZN	See Annexe 1	40/10 model.
50	See Annexe 4	.RC8ZN	See Annexe 1	50/11 model.
40SR.RC8ZN			See Annexe 1	Reinforced 40/10 model.
50SR.RC8ZN			See Annexe 1	Reinforced 50/11 model.

Attention: To complete this code, see Annexe 1 (Clear Opening) and Annexe 4 (Top-track position).
The related price is valid for aluminium CO: 800mm.

... it follows on page 78.

PCG Category

Top-track

T1H

40	See Annexe 4	.RT1ZN	See Annexe 1	40/10 model.
50	See Annexe 4	.RT1ZN	See Annexe 1	50/11 model.
400R.RT1ZN			See Annexe 1	Reinforced 40/10 model.
500R.RT1ZN			See Annexe 1	Reinforced 50/11 model.

T2H

40	See Annexe 4	.RT2ZN	See Annexe 1	40/10 model.
50	See Annexe 4	.RT2ZN	See Annexe 1	50/11 model.
40RR.RT2ZN			See Annexe 1	Reinforced 40/10 model.
50RR.RT2ZN			See Annexe 1	Reinforced 50/11 model.

T3H

40	See Annexe 4	.RT3ZN	See Annexe 1	40/10 model.
50	See Annexe 4	.RT3ZN	See Annexe 1	50/11 model.
40RR.RT3ZN			See Annexe 1	Reinforced 40/10 model.
50RR.RT3ZN			See Annexe 1	Reinforced 50/11 model.

T4H

40	See Annexe 4	.RT4ZN	See Annexe 1	40/10 model.
50	See Annexe 4	.RT4ZN	See Annexe 1	50/11 model.
40SR.RT4ZN			See Annexe 1	Reinforced 40/10 model.
50SR.RT4ZN			See Annexe 1	Reinforced 50/11 model.

Attention: To complete this code, see Annexe 1 (Clear Opening) and Annexe 4 (Top-track position).
The related price is valid for aluminium CO: 800mm.

fax.: +34 977 771 615 | e-mail: comercial@fermator.com | www.fermator.com

Header

C2H

0000.RC2	See Annexe 6	See Annexe 1	Header without indicator.
00CS.RC2	See Annexe 6	See Annexe 1	Header with indicator.

C4H

0000.RC4	See Annexe 6	See Annexe 1	Header without indicator.
00CS.RC4	See Annexe 6	See Annexe 1	Header with indicator.

C6H

0000.RC6	See Annexe 6	See Annexe 1	Header without indicator.
00CS.RC6	See Annexe 6	See Annexe 1	Header with indicator.

C8H

0000.RC8	See Annexe 6	See Annexe 1	Header without indicator.
00CS.RC8	See Annexe 6	See Annexe 1	Header with indicator.

T1H

0000.RT1	See Annexe 6	See Annexe 1	Header without indicator. PL ≤ 915mm.
00CS.RT1	See Annexe 6	See Annexe 1	Header with indicator. PL ≤ 915mm.
0000.RD1	See Annexe 6	See Annexe 1	Header without indicator. PL > 915mm. Right opening.
00CS.RD1	See Annexe 6	See Annexe 1	Header with indicator.PL > 915mm. Right opening.
0000.RI1	See Annexe 6	See Annexe 1	Header without indicator. PL > 915mm. Left opening.
00CS.RI1	See Annexe 6	See Annexe 1	Header with indicator. PL > 915mm. Left opening.

T2H

0000.RT2	See Annexe 6	See Annexe 1	Header without indicator. PL ≤ 915mm.
00CS.RT2	See Annexe 6	See Annexe 1	Header with indicator. PL ≤ 915mm.
0000.RD2	See Annexe 6	See Annexe 1	Header without indicator. PL > 915mm. Right opening.
00CS.RD2	See Annexe 6	See Annexe 1	Header with indicator. PL > 915mm. Right opening.
0000.RI2	See Annexe 6	See Annexe 1	Header without indicator. PL > 915mm. Left opening.
00CS.RI2	See Annexe 6	See Annexe 1	Header with indicator. PL > 915mm. Left opening.

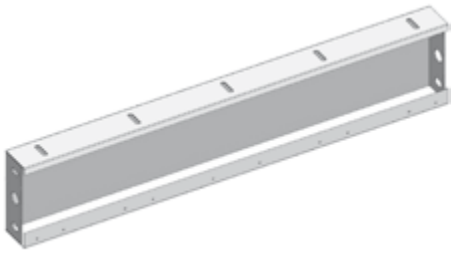

Attention: To complete this code, see Annexe 1 (Clear Opening) and Annexe 6 (Finishes).
The related price is valid for epoxy CO: 800mm.

For a headers with indicator attach hole position drawing.

... it follows on page 80. →

Category
PDI
Header

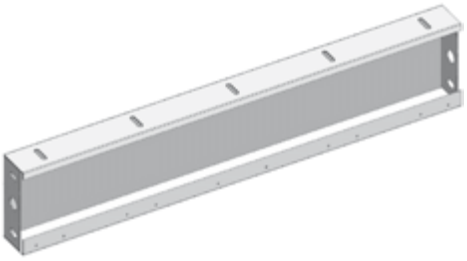

T3H

0000.RT3	See Annexe 6	See Annexe 1	Header without indication. PL ≤ 915mm.
00CS.RT3	See Annexe 6	See Annexe 1	Header with indication. PL ≤ 915mm.
0000.RD3	See Annexe 6	See Annexe 1	Header without indication. PL > 915mm. Right opening.
00CS.RD3	See Annexe 6	See Annexe 1	Header with indication. PL > 915mm. Right opening.
0000.RI3	See Annexe 6	See Annexe 1	Header without indication. PL > 915mm. Left opening.
00CS.RI3	See Annexe 6	See Annexe 1	Header with indication. PL > 915mm. Left opening.

T4H

0000.RT4	See Annexe 6	See Annexe 1	Header without indication. PL ≤ 915mm.
00CS.RT4	See Annexe 6	See Annexe 1	Header with indication. PL ≤ 915mm.
0000.RD4	See Annexe 6	See Annexe 1	Header without indication. PL > 915mm. Right opening.
00CS.RD4	See Annexe 6	See Annexe 1	Header with indication. PL > 915mm. Right opening.
0000.RI4	See Annexe 6	See Annexe 1	Header without indication. PL > 915mm. Left opening.
00CS.RI4	See Annexe 6	See Annexe 1	Header with indication. PL > 915mm. Left opening.

Attention: To complete this code, see Annexe 1 (Clear Opening) and Annexe 6 (Finishes).
The related price is valid for epoxy CO: 800mm.

For a headers with indicator attach hole position drawing.

Category
DST
Lock beak rubber stop

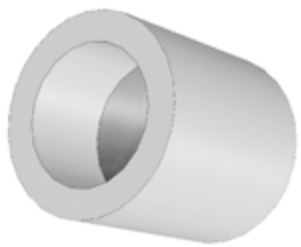

00TP.R0000	Lock beak rubber stop. M-6.

Category **PTP**

Lightcover with release lock

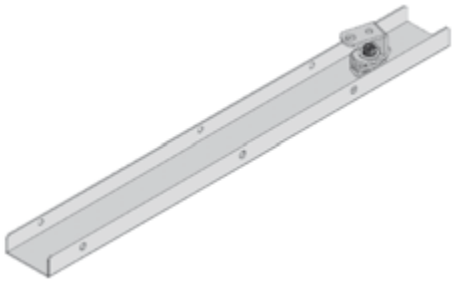

C4H

00	See Annexe 9	.RC4	See Annexe 6	See Annexe 1	Standard model.
AR	See Annexe 9	.RC4	See Annexe 6	See Annexe 1	Refurbishment model.

C6H

00	See Annexe 9	.RC6	See Annexe 6	See Annexe 1	Standard model.
AR	See Annexe 9	.RC6	See Annexe 6	See Annexe 1	Refurbishment model.

C8H

00	See Annexe 9	.RC8	See Annexe 6	See Annexe 1	Standard model.
AR	See Annexe 9	.RC8	See Annexe 6	See Annexe 1	Refurbishment model.

T2H

00	See Annexe 9	.RD2	See Annexe 6	See Annexe 1	Standard model. Right opening.
AR	See Annexe 9	.RD2	See Annexe 6	See Annexe 1	Refurbishment model. Right opening.
00	See Annexe 9	.RI2	See Annexe 6	See Annexe 1	Standard model. Left opening.
AR	Ver Anexo 9	.RI2	See Annexe 6	See Annexe 1	Refurbishment model. Left opening.

T3H

00	See Annexe 9	.RD3	See Annexe 6	See Annexe 1	Standard model. Right opening.
AR	See Annexe 9	.RD3	See Annexe 6	See Annexe 1	Refurbishment model. Right opening.
00	See Annexe 9	.RI3	See Annexe 6	See Annexe 1	Standard model. Left opening.
AR	See Annexe 9	.RI3	See Annexe 6	See Annexe 1	Refurbishment model. Left opening.

T4H

00	See Annexe 9	.RD4	See Annexe 6	See Annexe 1	Standard model. Right opening.
AR	See Annexe 9	.RD4	See Annexe 6	See Annexe 1	Refurbishment model. Right opening.
00	See Annexe 9	.RI4	See Annexe 6	See Annexe 1	Standard model. Left opening.
AR	See Annexe 9	.RI4	See Annexe 6	See Annexe 1	Refurbishment model. Left opening.

Attention: To complete this code, see Annexe 1 (Clear Opening), Annexe 6 (Finishes) and Annexe 8 (Contact model). The related price is valid for epoxy CO: 800mm. without contact.

CCE Category

Electrical contact support assembly

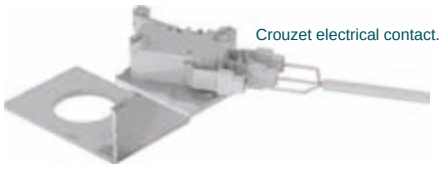
Crouzet electrical contact.

Schmersal electrical contact.

MF00.RD000	Crouzet electrical contact. Right hand.
MF00.RI000	Crouzet electrical contact. Left hand.
SM00.R0000	Schmersal electrical contact.
PR00.R0000	Prudhomme electrical contact.

GFH Category

Glass

GMHD.R0000	X dimension	Y dimension	Laminated Glass. Big vision. Right opening panel.
GMHI.R0000	X dimension	Y dimension	Laminated Glass. Big vision. Left opening panel.

X dimension code: CO / number of panels + 20
Y dimension code: CH - 120

Attention: If the value is 3 figures, it must be preceded by zeros to complete the code.

2.2.1

Landing

Semiautomatic model: Frame

Category **CRJ**

Locking device

FE	See Annexe 7	.SD000	Right hand Fermator model. For left opening semiautomatic doors.
FE	See Annexe 7	.SI000	Left hand Fermator model. For right opening semiautomatic doors.
KR	See Annexe 7	.SD000	Right hand Kronemberg model. For left opening semiautomatic doors.
KR	See Annexe 7	.SI000	Left hand Kronemberg model. For right opening semiautomatic doors.
GE	See Annexe 7	.SD000	Right hand Gervall model. For left opening semiautomatic doors.
GE	See Annexe 7	.SI000	Left hand Gervall model. For right opening semiautomatic doors.
GR	See Annexe 7	.SD000	Right hand reduced Gervall model. For left opening semiautomatic doors.
GR	See Annexe 7	.SI000	Left hand reduced Gervall model. For right opening semiautomatic doors.
PR	See Annexe 7	.SD000	Right hand Prudhomme model. For left opening semiautomatic doors.
PR	See Annexe 7	.SI000	Left hand Prudhomme model. For right opening semiautomatic doors.

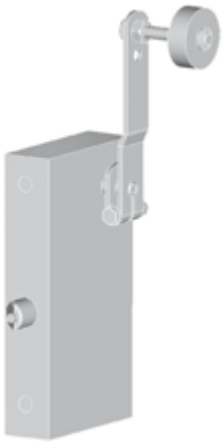

Attention: To complete this code, see Annexe 7 (Locking device driving table).

PTG

Category

Rubber Stop

FE00.S0000	For Fermator model doors.
GL00.S0000	For Global model doors.

fax.: +34 977 771 615 | e-mail: comercial@fermator.com | www.fermator.com

2.2.2

Landing

Semiautomatic model: Panel

Category **PAT**

Door closer

FE00.SD000	Fermator model. Right opening.
FE00.SI000	Fermator model. Left opening.
GL00.S0000	Global model.

Fermator door closer.

Global door closer.

Category **PMT**

Vision frame

FE00.S0000	0139	1357	Fermator model vision frame.
GL00.S0000	0164	1084	Global model vision frame.
GM00.S0000	CO*	CH*	Fermator model Big Vision frame.

*Attention: CO = Replace CO for clear opening preceded by zero.
CH = Replace CH for clear height.

GMI Category — Vision glass

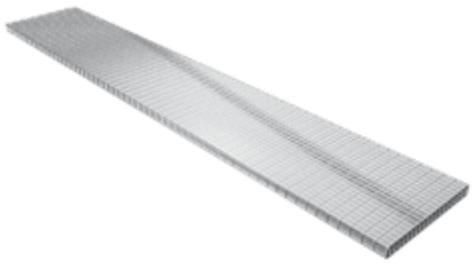

FE00.S0000	Fermator model vision glass.
GL00.S0000	Global model vision glass.

GFH Category — Big vision glass

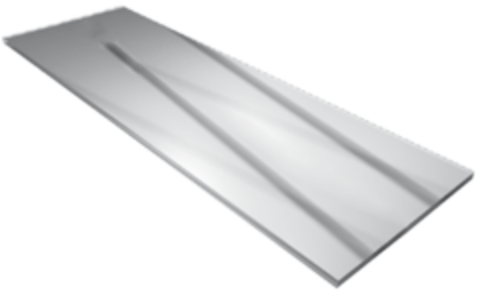

GMHD.S0000	CO*	CH*	Big vision glass. Right opening panel.
GMHI.S0000	CO*	CH*	Big vision glass. Left opening panel.

*Attention: CO = Replace CO for clear opening preceded by zero.
CH = Replace CH for clear height.

AMI Category — Vision clamp accessories set

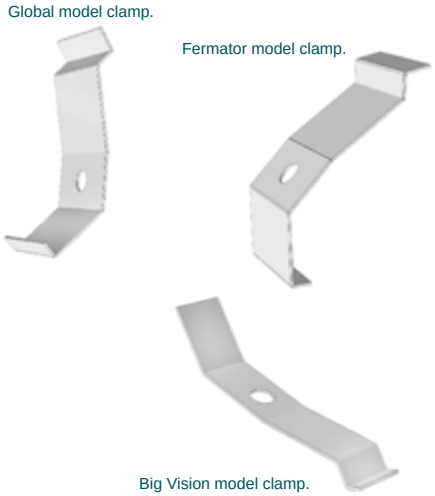

FE00.S0000	Clamp set for Fermator model door (8 units)
GL00.S0000	Clamp set for Global model door (8 units)
GM00.S0000	Clamp set for Big Vision model door (16 units).

fax.: +34 977 771 615 | e-mail: comercial@fermator.com | www.fermator.com

Category **CFB**

Hinge strip set

GL00.S0000	Global model doors hinge strip set.

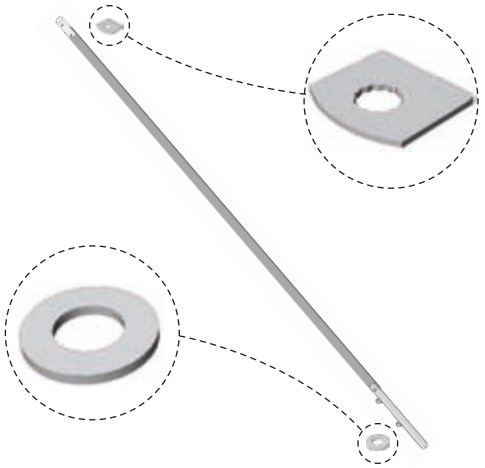

Category **PTA**

Handle

00EM.S00AL	For Fermator and Global model doors. Aluminium finish.
GMEM.S00LN	For Big Vision model doors. Black lacquered finish.

Category **PTA**

Push plate

00PE.S00AL	Push plate. CO ≥ 700mm.
00P6.S00AL	Push plate. CO ≤ 650mm.
GMPE.S00LN	Push plate. For Big Vision models.

PRJ Category

Contact Bridge

FEPC.S0000	For Fermator model.
KRPC.S0000	For Kronemberg model.
GEPC.S0000	For Gervall model.
PHPC.S0000	For Prudhomme model.

PRJ Category

Plunger

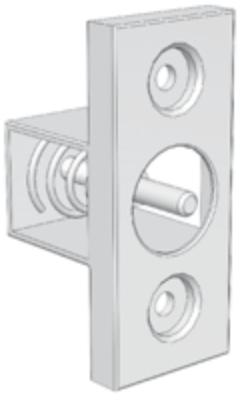

FEPE.S0000	For Fermator model.
KRPE.S0000	For Kronemberg model.
GEPE.S0000	For Gervall model.
PHPE.S0000	For Prudhomme model.

Fermator
AUTOMATIC DOORS FOR LIFTS

3

Annexes

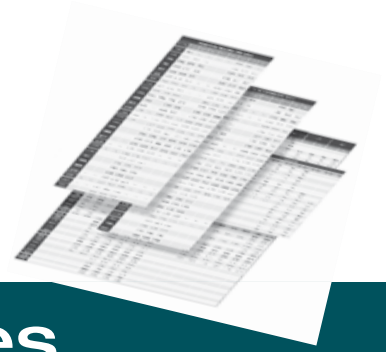

3

Annexes

1. CLEAR OPENING AND ENTRANCE TABLE.

CLEAR OPENING --- ENTRANCE	CODE	RATIO
500	0500	1
550	0550	1
600	0600	1
650	0650	1
700	0700	1
750	0750	1
800	0800	1
850	0850	1,06
900	0900	1,13
915	0915	1,14
950	0950	1,19
1000	1000	1,25
1050	1050	1,31
1100	1100	1,38
1150	1150	1,44
1200	1200	1,50
1250	1250	1,56
1300	1300	1,63
1350	1350	1,69
1400	1400	1,75
1450	1450	1,81
1500	1500	1,88
1550	1550	1,94
1600	1600	2,00
1650	1650	2,06
1700	1700	2,13
1750	1750	2,19
1800	1800	2,25
1850	1850	2,31
1900	1900	2,38
1950	1950	2,44
2000	2000	2,50
2050	2050	2,56
2100	2100	2,63
2150	2150	2,69
2200	2200	2,75

CLEAR OPENING --- ENTRANCE	CODE	RATIO
2250	2250	2,81
2300	2300	2,88
2350	2350	2,94
2400	2400	3,00
2450	2450	3,06
2500	2500	3,13
2550	2550	3,19
2600	2600	3,25
2650	2650	3,31
2700	2700	3,38
2750	2750	3,44
2800	2800	3,50
2850	2850	3,56
2900	2900	3,63
2950	2950	3,69
3000	3000	3,75
3050	3050	3,81
3100	3100	3,88
3150	3150	3,94
3200	3200	4,00
3250	3250	4,06
3300	3300	4,13
3350	3350	4,19
3400	3400	4,25
3450	3450	4,31
3500	3500	4,38
3550	3550	4,44
3600	3600	4,50
3650	3650	4,56
3700	3700	4,63
3750	3750	4,69
3800	3800	4,75
3850	3850	4,81
3900	3900	4,88
3950	3950	4,94
4000	4000	5,00

Note: In folding doors we should use Entrance, for the other doors we must use CO
To determine the final price, is necessary multiply the base price by the ratio in the table.

2. SYNC CABLE LENGTH BY CLEAR OPENING AND MODEL

VVVF 50 / 11 MODEL CABIN DOOR								
CO	CODE / LENGTH							
	C2H	C4H(1)	C4H(2)	C6H	C8H	T2H	T3H	T4H
600	02380	01920	00680	-	-	01080	00860	-
650	02480	02020	00730	-	-	01180	00860	00760
700	02580	02180	00760	-	-	01180	00960	00760
750	02680	02320	00810	-	-	01280	00960	00810
800	02780	02480	00810	-	-	01280	01010	00860
850	02880	02620	00860	-	-	01380	01010	00860
900	02980	02780	00910	-	-	01380	01080	00910
950	03080	02910	00960	-	-	01480	01080	00910
1000	03180	03080	01010	-	-	01480	01180	00960
1100	03380	03380	01080	-	-	01580	01280	01010
1200	03580	-	01080	00810	-	01680	01280	01060
1300	03780	-	01180	00860	-	01780	01380	01110
1400	03980	-	01180	00960	00760	01880	01480	01180
1500	04180	-	01280	01010	00810	01980	01480	01280
1600	04380	-	01280	01010	00810	02080	01580	01280
1700	-	-	01380	01080	00860	02180	01680	01380
1800	-	-	01380	01080	00910	02280	01680	01380
1900	-	-	01480	01180	00960	02380	01780	01480
2000	-	-	01480	01180	00960	02480	01880	01480
2100	-	-	01580	01180	01010	-	-	-
2200	-	-	01580	01280	01010	-	-	-
2300	-	-	01680	01280	01060	-	-	-
2400	-	-	01680	01280	01080	-	-	-
2500	-	-	01780	01380	01080	-	-	-
2600	-	-	01780	01380	01110	-	-	-
2700	-	-	01880	01480	01140	-	-	-
2800	-	-	01880	01480	01180	-	-	-
2900	-	-	01980	01480	01180	-	-	-
3000	-	-	01980	01580	01280	-	-	-

Note: To determine the final price it is necessary multiply length X 0'0097.

50 / 11 MODEL LANDING DOOR								
CO	CODE / LENGTH							
	C2H	C4H(1)	C4H(2)	C6H	C8H	T2H	T3H	T4H
600	02480	-	-	-	-	01080	00860	-
650	02680	02080	00760	-	-	01180	00860	00760
700	02880	02280	00760	-	-	01180	00960	00810
750	02980	02430	00810	-	-	01280	00960	00810
800	03180	02580	00810	-	-	01280	01010	00860
850	03380	02730	00860	-	-	01380	01010	00860
900	03580	02880	00910	-	-	01380	01080	00910
950	03780	03030	00960	-	-	01480	01080	00910
1000	03980	03180	01010	-	-	01480	01180	00960
1100	04380	03480	01080	00810	-	01580	01280	01010
1200	04780	-	01080	00810	-	01680	01280	01060
1300	05180	-	01180	00860	-	01780	01380	01110
1400	05580	-	01180	00960	00760	01880	01480	01180
1500	05980	-	01280	01010	00810	01980	01480	01280
1600	06380	-	01280	01010	00810	02080	01580	01280
1700	-	-	01380	01080	00860	02180	01680	01380
1800	-	-	01380	01080	00910	02280	01680	01380
1900	-	-	01480	01180	00960	02380	01780	01480
2000	-	-	01480	01180	00960	02480	01880	01480
2100	-	-	01580	01180	01010	-	-	-
2200	-	-	01580	01280	01010	-	-	-
2300	-	-	01680	01280	01060	-	-	-
2400	-	-	01680	01280	01080	-	-	-
2500	-	-	01780	01380	01080	-	-	-
2600	-	-	01780	01380	01110	-	-	-
2700	-	-	01880	01480	01140	-	-	-
2800	-	-	01880	01480	01180	-	-	-
2900	-	-	01980	01480	01180	-	-	-
3000	-	-	01980	01580	01280	-	-	-

Note: To determine the final price it is necessary multiply length X 0'0097.

1: The dimension is for the sync cable between opposite sides of hanger plates.
2: The dimension is for the sync cable between fast and show hanger plates.

fax.: +34 977 771 615 | e-mail: comercial@fermator.com | www.fermator.com

VVVF 40 / 10 MODEL CABIN DOOR								
CO	CODE / LENGTH							
	C2H	C4H(1)	C4H(2)	C6H	C8H	T2H	T3H	T4H
600	02280	01880	00630	-	-	01080	00860	00680
650	02280	02040	00710	-	-	01080	00960	00710
700	02880	02180	00710	-	-	01180	00960	00760
700 reduced	-	02100	-	-	-	-	-	-
750	02430	02280	00710	-	-	01180	01010	00760
800	02580	02480	00760	-	-	01280	01010	00860
850	02730	02630	00810	-	-	01280	01080	00860
900	02880	02780	00810	-	-	01380	01080	00910
950	03030	02930	00860	-	-	01380	01140	00910
1000	03180	03080	00860	-	-	01480	01140	00960
1100	03480	03380	00910	-	-	01580	01180	01080
1200	03780	-	01080	00860	-	01680	01290	01080
1300	04080	-	01180	00860	-	01780	01380	01180
1400	04380	-	01180	00960	00760	01880	01380	01180
1500	04680	-	01280	01010	00760	01980	01480	01280
1600	04980	-	01280	01010	00860	02080	01580	01280
1700	-	-	01380	01080	00860	02180	01580	01380
1800	-	-	01380	01080	00910	02280	01680	01380
1900	-	-	01480	01180	00910	02380	01780	01480
2000	-	-	01480	01140	00960	02480	01780	01480
2100	-	-	01580	01180	00960	-	-	-
2200	-	-	01580	01180	01080	-	-	-
2300	-	-	01680	01290	01080	-	-	-
2400	-	-	01680	01290	01080	-	-	-
2500	-	-	01780	01380	01080	-	-	-
2600	-	-	01780	01380	01180	-	-	-
2700	-	-	01880	01380	01180	-	-	-
2800	-	-	01880	01380	01180	-	-	-
2900	-	-	01980	01480	01180	-	-	-
3000	-	-	01980	01480	01280	-	-	-

Note: To determine the final price it is necessary multiply length X 0'0097.

40 / 10 MODEL LANDING DOOR								
CO	CODE / LENGTH							
	C2H	C4H(1)	C4H(2)	C6H	C8H	T2H	T3H	T4H
600	02370	01930	00660	-	-	01080	00760	00660
650	02570	02080	00710	-	-	01180	00910	00710
700	02770	02280	00710	-	-	01180	00960	00710
750	02970	02430	00760	-	-	01280	01010	00760
800	03170	02580	00760	-	-	01280	01010	00760
850	03370	02730	00810	-	-	01380	01080	00810
900	03570	02880	00810	-	-	01380	01080	00810
950	03770	03030	00960	-	-	01480	01180	00960
1000	03970	03180	00960	-	-	01480	01180	00960
1100	04370	03480	01010	-	-	01580	01280	01010
1200	04770	-	01080	00760	-	01680	01280	01080
1300	05170	-	01180	00910	-	01780	01380	01180
1400	05570	-	01180	00960	00710	01880	01480	01180
1500	05970	-	01280	01010	00760	01980	01480	01280
1600	06370	-	01280	01010	00760	02080	01580	01280
1700	-	-	01380	01080	00810	02180	01580	01380
1800	-	-	01380	01080	00810	02280	01680	01380
1900	-	-	01480	01180	00960	02380	01680	01480
2000	-	-	01480	01180	00960	02480	01780	01480
2100	-	-	01580	01280	01010	-	-	-
2200	-	-	01580	01280	01010	-	-	-
2300	-	-	01680	01280	01080	-	-	-
2400	-	-	01680	01280	01080	-	-	-
2500	-	-	01780	01380	01180	-	-	-
2600	-	-	01780	01380	01180	-	-	-
2700	-	-	01880	01480	01180	-	-	-
2800	-	-	01880	01480	01180	-	-	-
2900	-	-	01980	01580	01280	-	-	-
3000	-	-	01980	01580	01280	-	-	-

Note: To determine the final price it is necessary multiply length X 0'0097.

3. SILL FINISHES TABLE

		FINISH	CODE	RATIO	AVAILABILITY
S	P	Aluminium (16mm. track)	AL	1	
		Aluminium (8mm. track)	A8	1	
S		Reinforced aluminium	AR	1,5	
		20mm. height aluminium	A2	1	
S	P	Sheet metal steel	HC	4,30	
S		Solid steel	HM	6,80	
S	P	Sheet metal stainless steel	XC	5,90	
S		Solid stainless steel	XM	9,75	
		Anodized gold aluminium	AO	2,8	
		Anodized bronze aluminium	AB	2,8	

Note: Only finishes marked with a P are valid for folding sills.
Only finishes marked with a S are valid for sill supports.

To determine the final price it is necessary multiply the base price by the ratio in the table.

4. SILL TRACK POSITION

TYPE OF DOOR	CODE	TRACK DIAGRAM
C2H	00	
C4H	GL	
	GR	
C6H	GL	
	GM	
	GR	
C8H	GL	
	GM	
	GR	
	GS	

TYPE OF DOOR	CODE	TRACK DIAGRAM
T1H	00	
T2H	GL	
	GR	
T3H	GL	
	GM	
	GR	
T4H	GL	
	GM	
	GR	
	GS	

fax.: +34 977 771 615 | e-mail: comercial@fermator.com | www.fermator.com

5. SAFETY SPRING LENGTH BY CLEAR OPENING AND MODEL

CLEAR OPENING	LENGTH CODE							
	T1H	T2H	T3H	T4H	C2H	C4H	C6H	C8H
600	0424	0374	0354	0392	0560	0392		
700	0474	0374	0354	0392	0560	0392		
800	0474	0374	0442	0392	0560	0442		
900		0374	0442	0392	0560	0442		
1000		0374	0442	0392	0560	0442		
1100		0424	0442	0392	0424	0442		
1200		0424	0442	0442	0424	0374	0354	
1300		0474	0442	0442	0474	0374	0354	
1400		0474	0442	0442	0474	0374	0354	0392
1500		0474	0474	0474	0474	0374	0354	0392
1600		0474	0474	0474	0474	0374	0442	0392
1700						0374	0442	0392
1800						0374	0442	0392
1900						0374	0442	0392
2000						0374	0442	0392
2100						0374	0442	0392
2200						0424	0442	0392
2300						0424	0442	0392
2400						0424	0442	0442

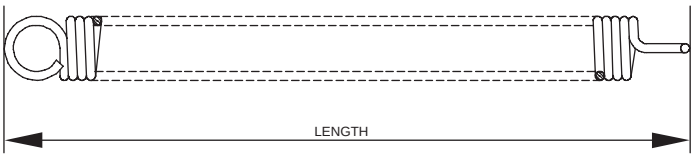

6. FINISHES TABLE

FINISH	CODE	RATIO
Stainless Steel	XN	1,25
Epoxy	IM	1

Note: To determine the final price it is necessary multiply the base price by the ratio in the table.

7. LOCKING DEVICE DRIVING

TYPE	CODE	RATIO
Lateral driving	L0	1
Lateral driving with electrical contact	LC	1
Frontal Driving	F0	1
Frontal driving with electrical contact	FC	1
Reduced frontal driving (only Gervall)	FR	1

Note: To determine the final price it is necessary multiply the base price by the ratio in the table.

8. TERMINALS TABLE

AVAILABILITY	CODE	RATIO
With circuit	CC	1
Without circuit	SC	1

Note: To determine the final price it is necessary multiply the base price by the ratio in the table.

9. LIGHT COVER CONTACT TABLE

MODEL	CODE	RATIO
Without contact	00	1
Schmersal	SM	8
Crouzet	MF	3
Prudhomme	PR	10

Note: To determine the final price it is necessary multiply the base price by the ratio in the table.

fax.: +34 977 771 615 | e-mail: comercial@fermator.com | www.fermator.com

10. SILL WIDTH TABLE

SILL WIDTH	PANEL WIDTH	DOOR MODEL	SITUATION	CODE
54	50	T1 - C2	Cabin-Landing	54
70	30+30	T2-C4	Cabin	70
70	18+18+18	T3	Cabin	7E
75	32,5 + 32,5	T2	Landing	75
80	30 + 50	T2-C4	Cabin	80
90	40 + 40	T2-C4	Cabin-Landing	90
90	25 + 25 + 25	T3-C6	Cabin	9A
90	30 + 50	T2-C4	Cabin	9E
135	40 + 40 + 40	T3-C6	Cabin-Landing	13
180	40 + 40 + 40 + 40	T4-C8	Cabin-Landing	18

11. SLOT TABLE

AVAILABILITY	CODE	RATIO
With Slot	CO	1
Without Slot	00	1

Note: To determine the final price it is necessary multiply the base price by the ratio in the table.

12. VVVF OPTIONS TABLE

DEVICE	CODE	RATIO
Without emergency power supply	A	1
With emergency power supply	B	1,6

Note: To determine the final price it is necessary multiply the base price by the ratio in the table.

Fermator
AUTOMATIC DOORS FOR LIFTS

4

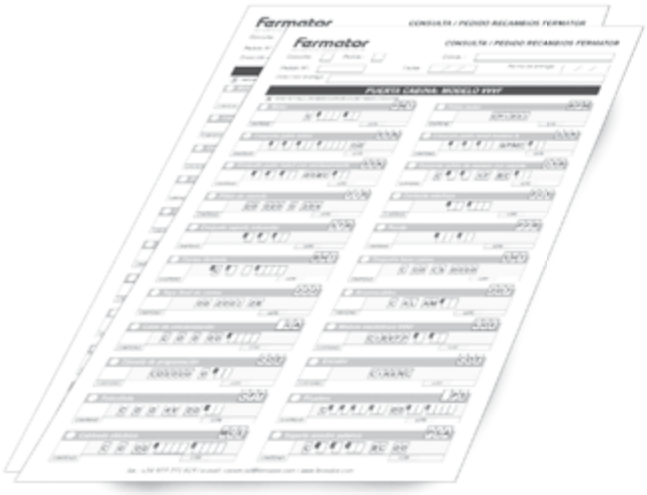

Order form

Fermator
AUTOMATIC DOORS FOR LIFTS

ORDER FORM SPARE PARTS

Enquiry: ☐ Order: ☐ Client:

Order Nº: Date: / / Delivery date: / /

Delivery adress:

SPARE PARTS ORDER

QUANTITY	CATEGORY - CODE .	QUANTITY	CATEGORY - CODE .
	- .		- .
	- .		- .
	- .		- .
	- .		- .
	- .		- .
	- .		- .
	- .		- .
	- .		- .
	- .		- .
	- .		- .
	- .		- .
	- .		- .
	- .		- .
	- .		- .
	- .		- .

Category alphabetical index

Category	Name	Page	Section
ACH	Panel accesories set.	75	2.1.3
ACJ	Release lock accesory assembly.	74	2.1.3
ADS	Triangular key accesory set.	74	2.1.3
AEC	Operator fastening bracket set.	56	1.4
AES	Frame fastening bracket set.	73	2.1.3
AGH	Folding door model panel guide shoe assembly.	49	1.3
AGH	VVVF & mechanical model panel guide shoe assembly.	56	1.4
AGH	Panel guide shoe accesories set.	76	2.1.3
AMI	Vision clamp accesories set.	86	2.2.2
APT	Pulling roller accessories set.	76	2.1.3
ASF	Jamb fixing support accessory set.	74	2.1.3
ASH	Panel regulator support.	57	1.4
ASH	Panel regulator support accesories set.	76	2.1.3
BHT	Toothed belt.	20	1.1
BOC	Belt.	32	1.2
BOC	Belt.	43	1.3
CAM	Cable fastener assembly.	22	1.1
CAM	Cable fastener assembly.	33	1.2
CAM	Cable fastener assembly.	70	2.1.1
CBA	Drive arm assembly.	30	1.2
CBA	Drive arm assembly.	42	1.3
CBA	Clutch assembly.	48	1.3
CCE	Electrical contact support assembly.	82	2.1.3
CDL	Contact and lock skate assembly.	13	1.1
CEN	Lock assembly.	48	1.3
CFB	Hinge strip set.	87	2.2.2
CFT	Photocell set.	24	1.1
CFT	Photocell curtain.	54	1.4
CHT	Toothed belt base assembly.	21	1.1
CLA	Release cam assembly.	15	1.1
CLA	Release cam assembly.	32	1.2
CLA	Cam.	48	1.3
CLA	Drive cam assembly.	51	1.4
COE	Capacitor.	39	1.2
COE	Capacitor.	49	1.3
COE	Fuse.	55	1.4
COE	Terminal strip.	58	1.4
CPE	Lock beak assembly.	67	2.1.1
CPP	Lock beak-plate assembly.	65	2.1.1
CPR	Idle pulley tensioner assembly.	17	1.1
CPT	Rollers holder plate assembly.	66	2.1.1
CRJ	Locking device.	83	2.2.1
CRP	Clear opening regulator assembly.	39	1.2
CSC	Lock contact support assembly.	68	2.1.1
CSK	Skate assembly.	12	1.1
CSK	Q model skate assembly for special height cabins.	14	1.1
CSK	Skate assembly.	31	1.2
CSL	Cabin locking device assembly.	16	1.1
CSL	Cabin locking device assembly.	32	1.2
CSZ	Retainer clamp asembly.	38	1.2
CTR	Stopping retainer assembly.	18	1.1
DEP	Microswitch operation shaft cam.	46	1.3
DPO	Microswitch operator pulley cam.	39	1.2
DPO	Belt guide.	47	1.3
DSK	Connecting rod rubber stop.	15	1.1
DSK	Pulling trigger.	16	1.1
DSR	Safety spring fastening support.	70	2.1.1
DST	Lock beak rubber stop.	80	2.1.3
EOP	Operator shaft.	46	1.3
GFH	Glass.	53	1.4
GFH	Glass.	82	2.1.3
GFH	Big vision glass.	86	2.2.2
GMI	Vision glass.	86	2.2.2
HOC	Motor support.	12	1.1
KCE	Electrical contact assembly.	21	1.1
KCE	Electrical contact assembly.	34	1.2
KCE	Electrical contact assembly.	43	1.3
KCE	Electrical contact assembly.	69	2.1.1
KDL	Unlocking device kit.	24	1.1

Category	Name	Page	Section
KFT	Photocell curtain support assembly.	55	1.4
PAC	Sill support.	57	1.4
PAP	Sill support.	44	1.3
PAT	Door closer.	85	2.2.2
PBI	Hinge.	47	1.3
PCA	Syncronisation cable.	22	1.1
PCA	Syncronisation cable.	70	2.1.1
PCE	Microswitch electrical contact.	40	1.2
PCE	Microswitch electrical contact.	46	1.3
PCF	Sill support console.	71	2.1.2
PCG	Top-track.	59	1.4
PCG	Top-track.	77	2.1.3
PCQ	Bushing.	44	1.3
PDI	Header.	79	2.1.3
PFA	Toe guard mechanic and VVVF models.	52	1.4
PFA	Retractable toe guard.	52	1.4
PFA	Folding toe guard.	53	1.4
PFA	Toe guard.	71	2.1.2
PFR	Roller.	23	1.1
PFR	Roller.	33	1.2
PFR	Roller.	69	2.1.1
PLP	Skate drive assembly.	34	1.2
PMT	Motor.	11	1.1
PMT	Motor.	29	1.2
PMT	Motor.	41	1.3
PMT	Vision frame.	85	2.2.2
PPM	Motor pulley.	12	1.1
PPM	Motor pulley.	31	1.2
PPM	Motor pulley.	42	1.3
PPO	Pulley.	30	1.2
PPO	Pulley.	42	1.3
PPR	Idle pulley.	18	1.1
PPS	Sill.	25	1.1
PPS	Sill.	35	1.2
PPS	Sill.	44	1.3
PPS	Sill.	72	2.1.2
PPS	Sill suplement.	72	2.1.2
PRJ	Contact bridge.	88	2.2.2
PRJ	Plunger.	88	2.2.2
PSA	Carriage pulling support.	24	1.1
PSP	Lock beak support.	67	2.1.1
PSZ	Retainer clamp.	38	1.2
PTA	Handle.	47	1.3
PTA	Handle.	87	2.2.2
PTA	Push plate.	87	2.2.2
PTB	Pully arm stop.	40	1.2
PTF	End stroke stop.	21	1.1
PTF	End stroke stop.	33	1.2
PTG	Rubber stop.	58	1.4
PTG	Rubber stop.	75	2.1.3
PTG	Rubber stop.	84	2.2.1
PTP	Lightcover with release lock.	81	2.1.3
PTR	Stopping retainer trigger.	19	1.1
PVZ	Retainer rod.	38	1.2
QCI	Labels.	61	1.4
RSK	Pulling trigger spring.	17	1.1
RSK	Connecting rod spring.	17	1.1
RSR	Safety spring.	69	2.1.1
RTR	Stopping retainer spring.	20	1.1
SRU	Ball-Joint.	43	1.3
STR	Stopping retainer support sub assembly	19	1.1
UHT	HTD belt regulation tool.	58	1.4
URP	Lock beak regulation tool.	59	1.4
UTM	Modernisation installing tool.	75	2.1.3
VCI	VVVF electronic module.	23	1.1
VCI	Emergency power supply SAI.	53	1.4
VCI	Emergency power supply.	54	1.4
VCI	C2T electronic module.	55	1.4
VCP	Programming console.	22	1.1
VMT	Encoder.	11	1.1
WCE	Electrical wires.	28	1.1
WCE	Electrical wiring.	45	1.3

Fermator

AUTOMATIC DOORS FOR LIFTS